# DE' LONGHI "AU/NZ" EC9665.BM

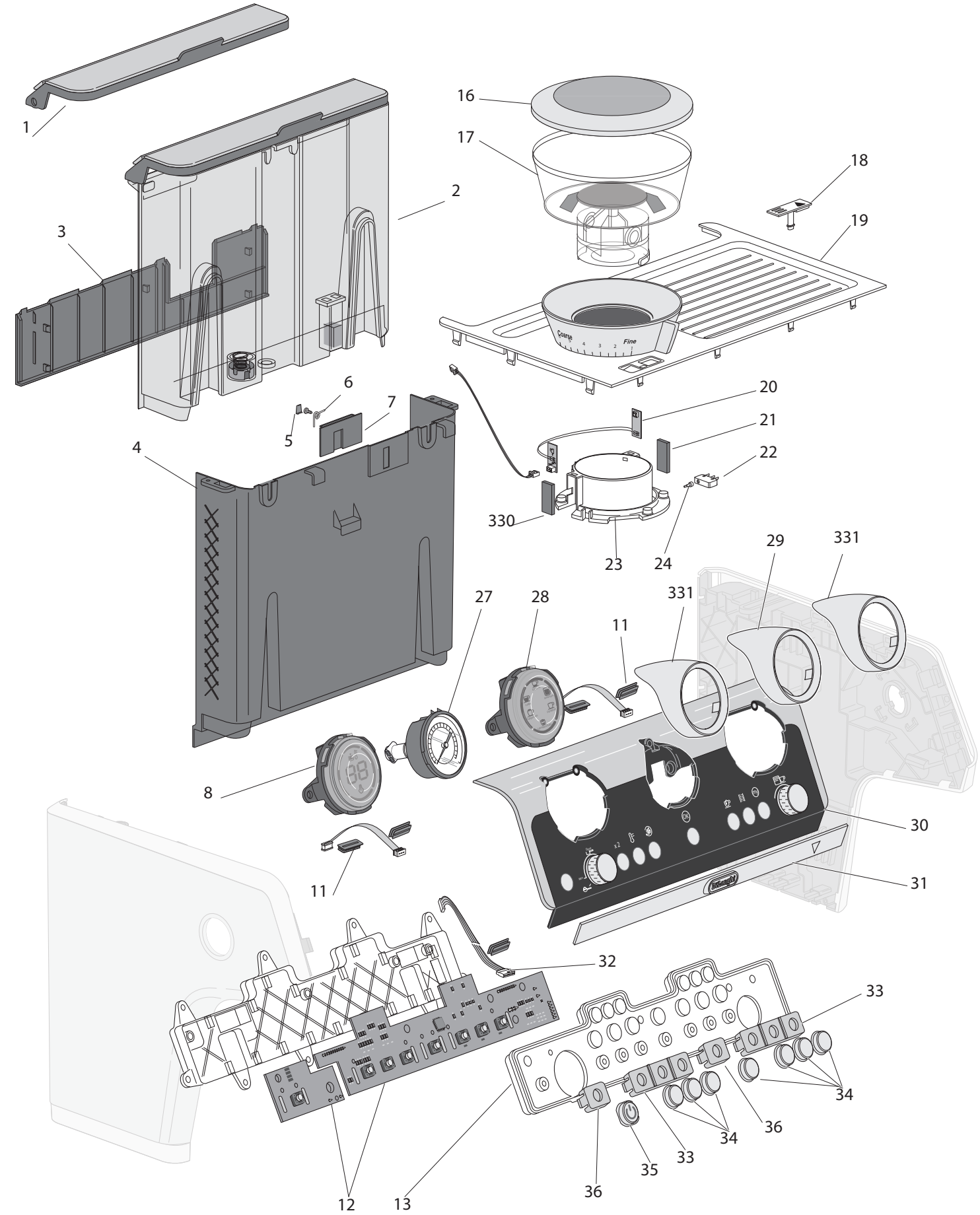

# DE' LONGHI "AU/NZ" EC9665.BM

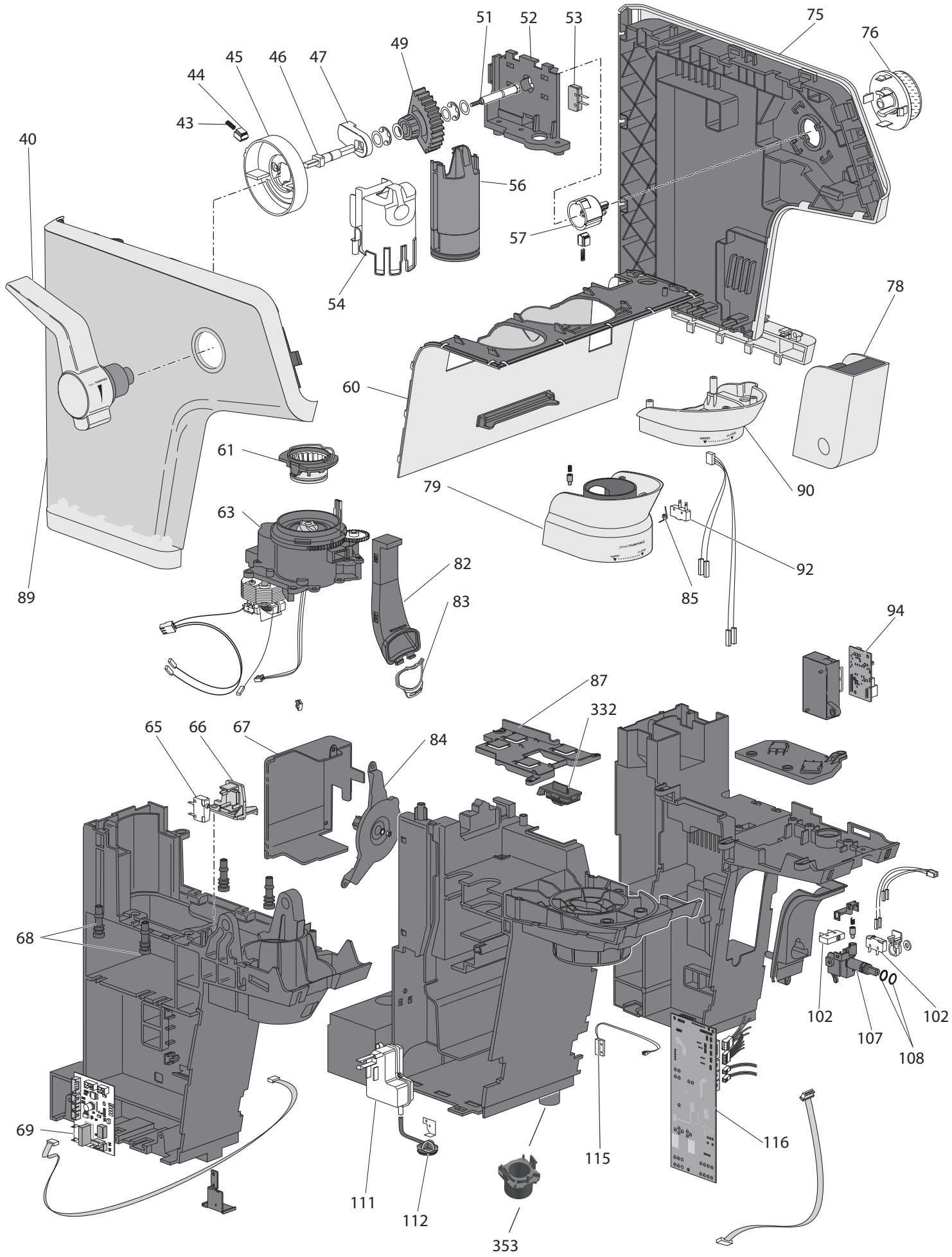

# DE' LONGHI "AU/NZ" EC9665.BM

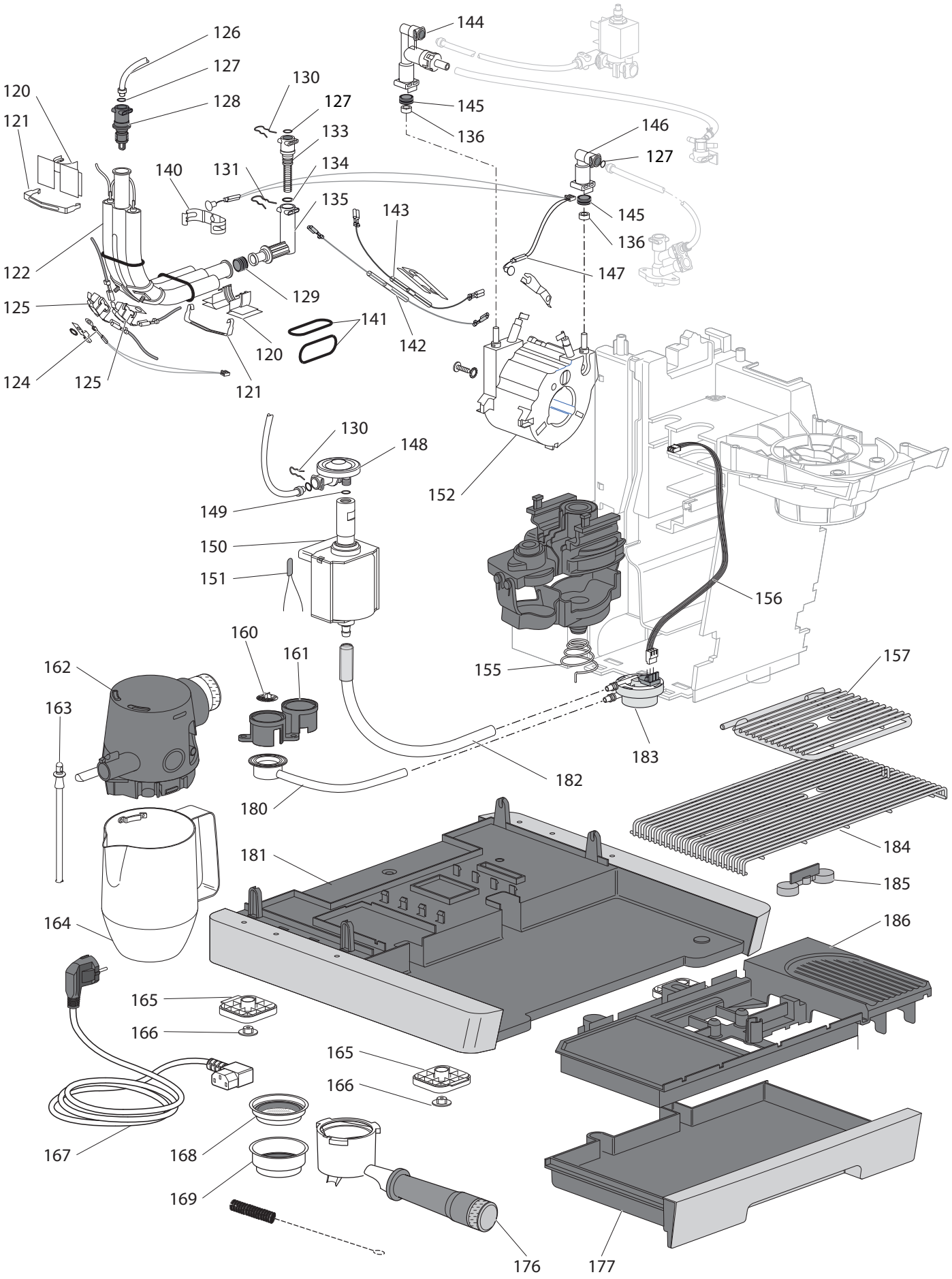

# DE' LONGHI "AU/NZ" EC9665.BM

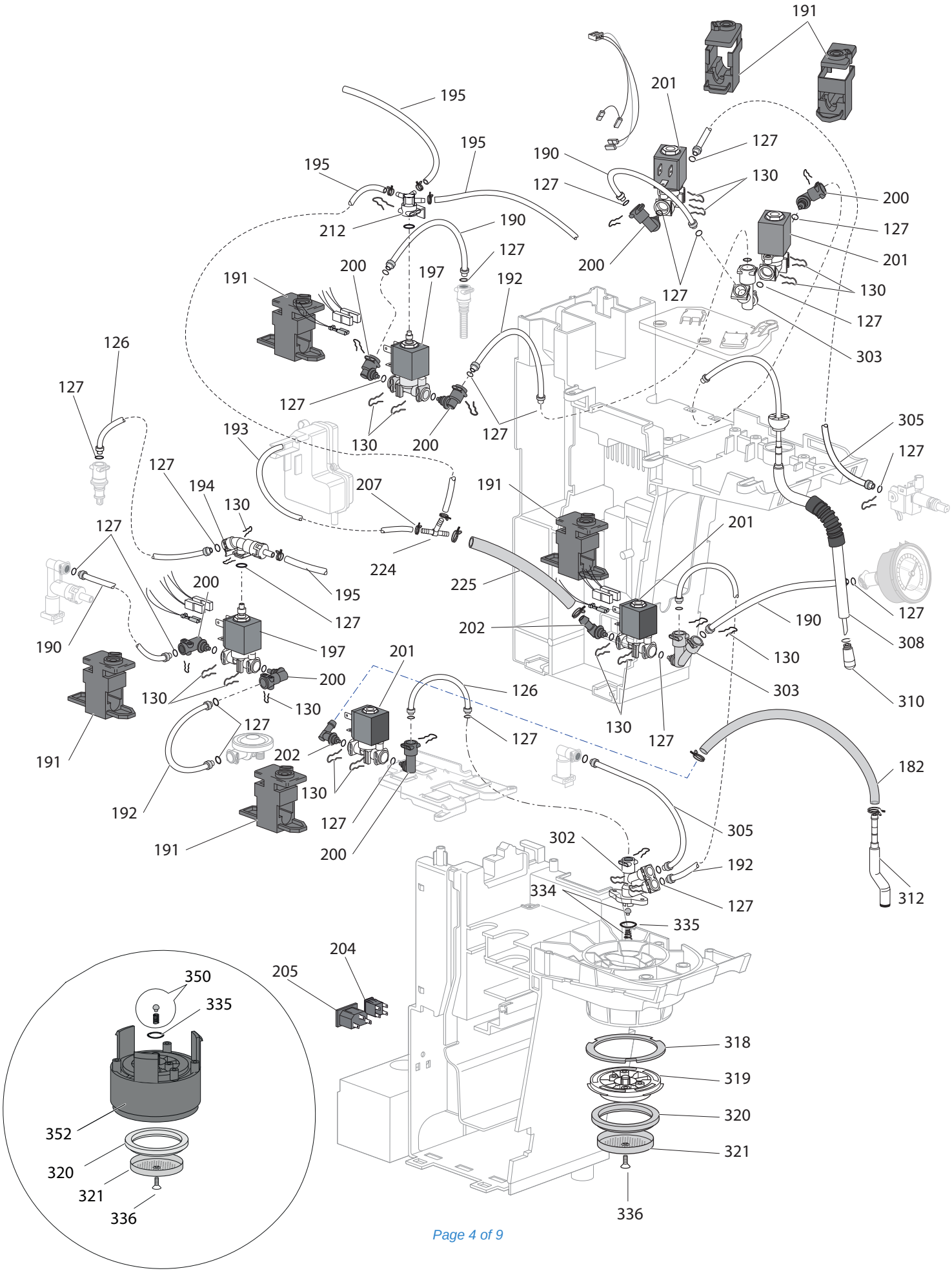

| Position | Code | description |
|---|---|---|
| 000A | 5513233861 | BRUSH |
| 000B | AS00000378 | ECOMULTICLEAN 10ML VIAL |
| 000C | AS00001634 | CLEANING TOOL |
| 000D | AS00003850 | CLEANING TOOL |
| 000E | AS00008164 | FILTER RETAINING SPRING (AISI 302) |
| 000F | AS00005073 | FRAME |
| 000G | AS00007089 | KIT MANOPOLE EC96 V1 |
| 001 | AS00001641 | TANK COVER |
| 002 | AS00001665 | TANK |
| 003 | AS00001212 | REAR PANEL |
| 004 | AS00001213 | REAR PANEL |
| 005 | 5313251331 | SPRING COVER |
| 006 | 6113211511 | SPRING |
| 007 | 5313262081 | SUPPORT |
| 008 | AS00001203 | DISPLAY |
| 011 | 5313237781 | CONNECTORS GASKET |
| 012 | AS00001214 | CONTROL BOARD |
| 013 | AS00001215 | GASKET |
| 016 | 5513272149 | COVER |
| 017 | AS00006235 | COFFEE BEANS TANK |
| 018 | 5513271679 | COVER ASSEMBLY |
| 019 | AS00001642 | COVER ASSEMBLY |
| 020 | 5213224491 | COFFEE BEANS SENSOR |
| 021 | 5313259421 | RIGHT RUBBER PAD |
| 022 | 5113210211 | MICROSWITCH |
| 023 | 5513201279 | SUPPORT |
| 024 | 5313261761 | PEG |
| 027 | AS00001205 | PRESSURE GAUGE |
| 028 | AS00001202 | DISPLAY |
| 029 | 5313258861 | TEMPLATE |
| 030 | AS00001643 | CONTROL PANEL ASSEMBLY WITHOUT BOARD |
| 031 | AS00001200 | STAINLESS STEEL TEMPLATE |
| 032 | 5013277949 | WIRING ASSEMBLY |
| 033 | AS00001216 | SUPPORT |
| 034 | AS00001217 | PUSH BUTTON |
| 035 | AS00001218 | ON/OFF KEY |
| 036 | AS00001219 | SUPPORT |

| | | |
|---|---|---|
| 040 | AS00008331 | LEVER ASSEMBLY |
| 043 | 6113212661 | MICROSWITCH SPRING |
| 044 | 5313259951 | ACTUATOR |
| 045 | 5313267101 | FLANGE |
| 046 | AS00001220 | PIN |
| 047 | 5313268391 | ACTUATOR |
| 049 | 5313258621 | GEAR |
| 051 | 6013215811 | PIN |
| 052 | AS00001221 | MICROSWITCH SUPPORT |
| 053 | 5113210421 | MICROSWITCH |
| 054 | AS00001209 | COVER |
| 056 | AS00001207 | TAMPER |
| 057 | 5313259941 | CAM |
| 060 | AS00001222 | PANEL |
| 061 | 5513201069 | GRINDER |
| 063 | AS00008439 | GRINDER COMPLETE WITH UPPER GRINDER |
| 065 | 5132104100 | MICROSWITCH (250V 85°) |
| 066 | 5313268401 | MICROSWITCH SUPPORT |
| 067 | 5313258701 | COVER |
| 068 | 5313259441 | SUPPORT |
| 069 | 5213226451 | ELECTRONIC PCB |
| 075 | AS00001644 | RIGHT PANEL |
| 076 | 5513271449 | STEAM KNOB |
| 078 | AS00001224 | DESCALER ADAPTER |
| 079 | AS00001285 | ASSY FILTER HOLDER SUPPORT+MICRO SWITCH |
| 082 | 5513271669 | FEED CHUTE EXTENSION |
| 083 | 5313267091 | GASKET |
| 084 | 5313259171 | POD SUPPORT |
| 085 | 6113212801 | SPRING |
| 087 | 5313259211 | SOLENOID VALVE SUPPORT |
| 089 | AS00001645 | LEFT PANEL |
| 090 | 5513271689 | COVER |
| 092 | 5132110500 | MICROSWITCH (250V 85°) |
| 094 | AS00001225 | BOARD |
| 102 | 5132104100 | MICROSWITCH (250V 85°) |
| 107 | AS00002522 | COUPLING |
| 108 | 5313220031 | O-RING GREEN (D=9.25 T=1.78) |
| 111 | 5513271429 | EXPANSION CHAMBER |

| | | |
|---|---|---|
| 112 | AS00001226 | TUBE |
| 115 | 5013278059 | REED SENSOR |
| 116 | 5213270639 | POWER BOARD |
| 120 | 5313229671 | VAPORIZER CONNECTOR CLIP |
| 121 | 6113210881 | SPRING |
| 122 | 5513251971 | VAPORIZER (1070W 230V) |
| 124 | AS00000651 | NTC PROBE |
| 125 | 5213215191 | TCO (15A 318°) |
| 126 | 5532112000 | TUBE / 2 BUSHES (PTFE DI2-DE4 L=115) |
| 127 | 5313217701 | O-RING (D=3.85 T=2) |
| 128 | 55132A1022 | STEAM CONNECTION |
| 129 | 5313224421 | GASKET |
| 130 | 6113213191 | CLIP (WIRE 1,2 AISI302) |
| 131 | 6132101300 | SPRING |
| 133 | 5313258151 | FILTER |
| 134 | 5313229931 | O-RING |
| 135 | 5313258141 | CONNECTION |
| 136 | 5332239300 | SPACER |
| 140 | 6013211961 | FIXING BRACKET (NTC) |
| 141 | 5313250191 | RING |
| 142 | 5013278079 | TCO WIRING |
| 143 | 5013278099 | TCO WIRING |
| 144 | 7313288979 | SAFETY VALVE |
| 145 | 5313228791 | GENERATOR GASKET |
| 146 | 5313258721 | L CONNECTION |
| 147 | 5013278379 | NTC PROBE |
| 148 | 5513230831 | FLOW REGULATOR |
| 149 | 5313231171 | O-RING |
| 150 | 5113212531 | PUMP (ARS 220-240V 70W) |
| 151 | AS00001228 | PROTECTOR |
| 0152 | 5513220541 | GENERATOR (5X05 230V1300W PLAS.CONNEC.) |
| 155 | 6113212671 | SPRING |
| 156 | 5013278039 | WIRING ASSEMBLY (450 mm) |
| 157 | 6013215791 | CUP HOLDER |
| 160 | 5313236311 | WATER TANK FILTER |
| 161 | 5313259221 | CONNECTOR |
| 162 | AS00001229 | COVER |
| 163 | 5313226701 | MILK INTAKE TUBE |

| | | |
|---|---|---|
| 164 | AS00001230 | CARAFE |
| 165 | 5313259271 | FOOT |
| 166 | 5313225561 | RUBBER FOOT PAD |
| 167 | 5013279914 | POWER SUPPLY CORD WITH PLUG (AU) |
| 168A | AS00001231 | Small one-cup |
| 168B | AS00002564 | 1-DOSE FILTER |
| 169A | AS00001232 | Large two-cup filter |
| 169B | AS00002565 | 2-DOSE FILTER |
| 176A | AS00001233 | SUMP |
| 176B | AS00008263 | FILTER |
| 177 | AS00004622 | DRIP TRAY |
| 180 | 5313259381 | FLOWMETER-PUMP TUBE |
| 181 | AS00001666 | SUPPORT BASE |
| 182 | AS00000655 | SILICONE HOSE (4X8 L=190mm) |
| 183 | 5213225251 | FLOWMETER |
| 184 | AS00001235 | CUP PLATE |
| 185 | 5513201319 | FLOAT |
| 186 | AS00001236 | DRIP TRAY |
| 190 | 5513213821 | TUBE WITH 2 BUSHES (L170) |
| 191 | 5313259361 | SOLENOID VALVE SUPPORT |
| 192 | 5513213661 | TUBE WITH 1 BUSH (L135) |
| 193 | 5313275689 | TUBE (SIL PLAT 3x6.5 L.280mm) |
| 194 | AS00000650 | SAFETY VALVE |
| 195 | AS00000656 | TUBE (L110) |
| 197 | 5213218251 | SOLENOID VALVE (3VA 230V) |
| 200 | 5313218341 | CONNECTION |
| 201 | 5213218321 | SOLENOID VALVE (2VA 230V) |
| 202 | 5313233291 | L CONNECTION |
| 204 | 5132112500 | SWITCH |
| 205 | 5232114100 | CONNECTOR |
| 207 | 9824800009 | CLIP CLAMP (8.30-8.10-7.80 ) |
| 212 | 5313259311 | CONNECTOR |
| 224 | 5313216541 | A T CONNECTION (PRES BLOCK) |
| 225 | 5313214011 | TUBE (L130) |
| 302 | AS00002562 | COFFEE OUTLET |
| 303 | 5313225171 | A Y CONNECTION |
| 305 | 5513271399 | TUBE (PTFE DI2-DE4 L=215) |
| 308 | AS00001628 | STEAM HOSE ASSEMBLY |

| | | |
|---|---|---|
| 310 | AS00002710 | NOZZLE |
| 312 | 5513271459 | WATER OUTLET TUBE |
| 318 | 5313261771 | GASKET |
| 319 | AS00002561 | BREWING GASKET SUPPORT |
| 320 | AS00005075 | BOTTOM GASKET |
| 321 | 6013215981 | DIFFUSER |
| 330 | 5313259431 | LEFT RUBBER PAD |
| 331 | AS00001239 | TEMPLATE |
| 332 | 5313259371 | GASKET |
| 334 | AS00002521 | VALVE |
| 335 | 537177 | GASKET |
| 336 | 9812631250 | SCREW (3.5X12) |
| 350 | AS00004266 | VALVE |
| 352 | AS00005745 | INSERT |
| 353 | 5313276299 | CONNECTOR |