0132214053

DE'LONGHI "INT/A/RU/SKA/EST/TR" ESAM04.320.S

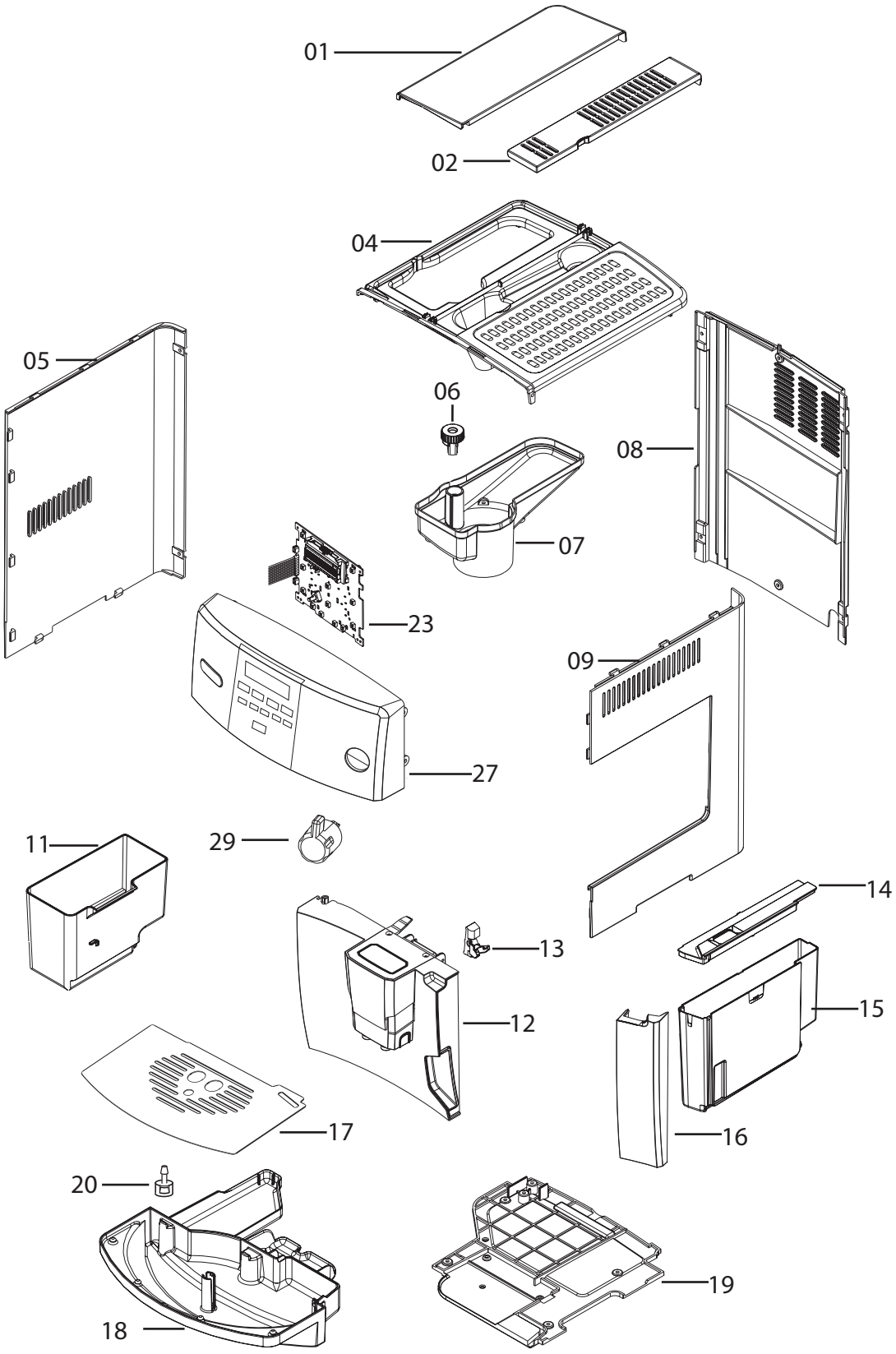

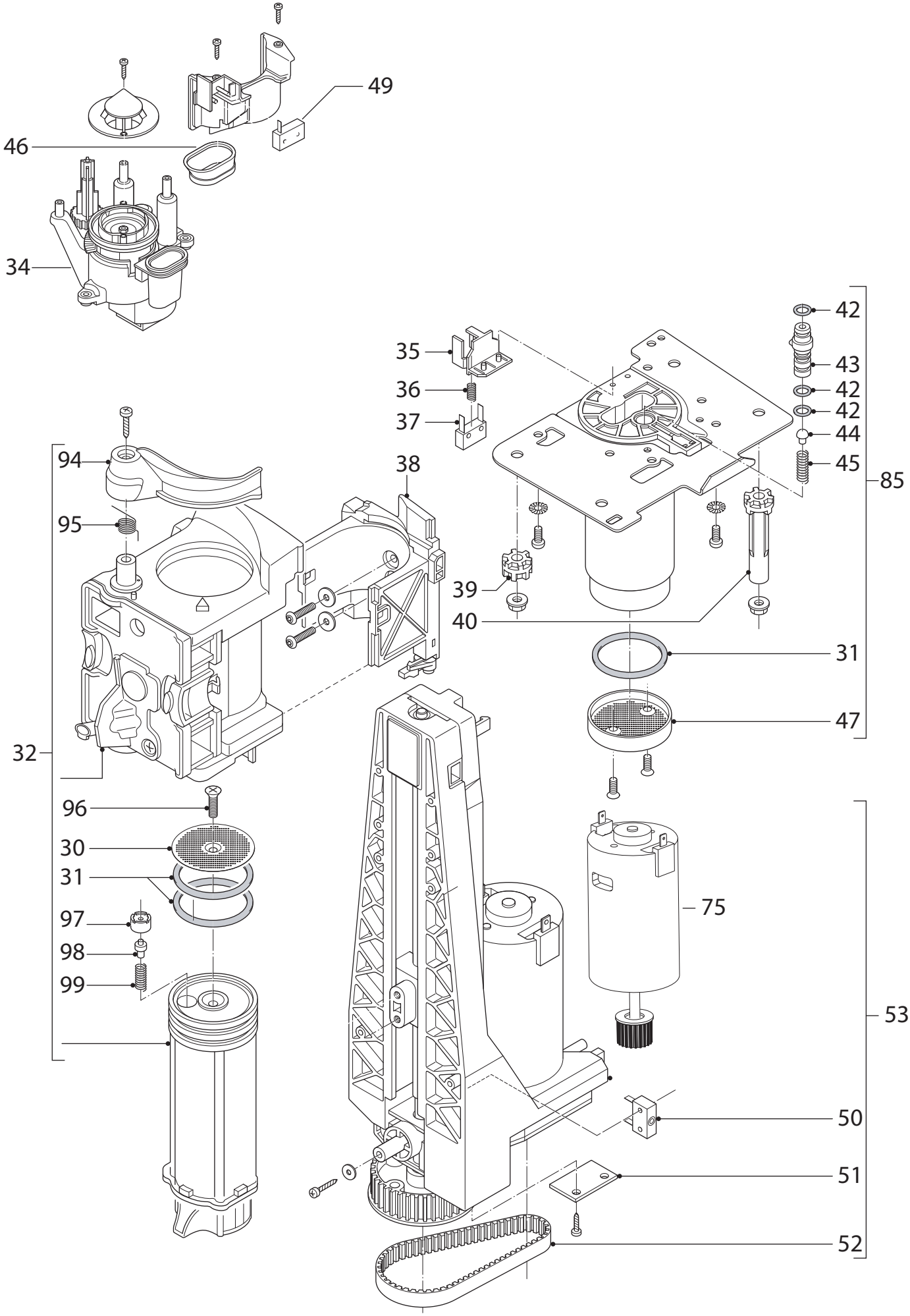
49
46
34
35
36
37
42
43
42
42
44
45
85
94
95
38
39
40
31
47
32
96
30
31
97
98
99
75
53
50
51
52

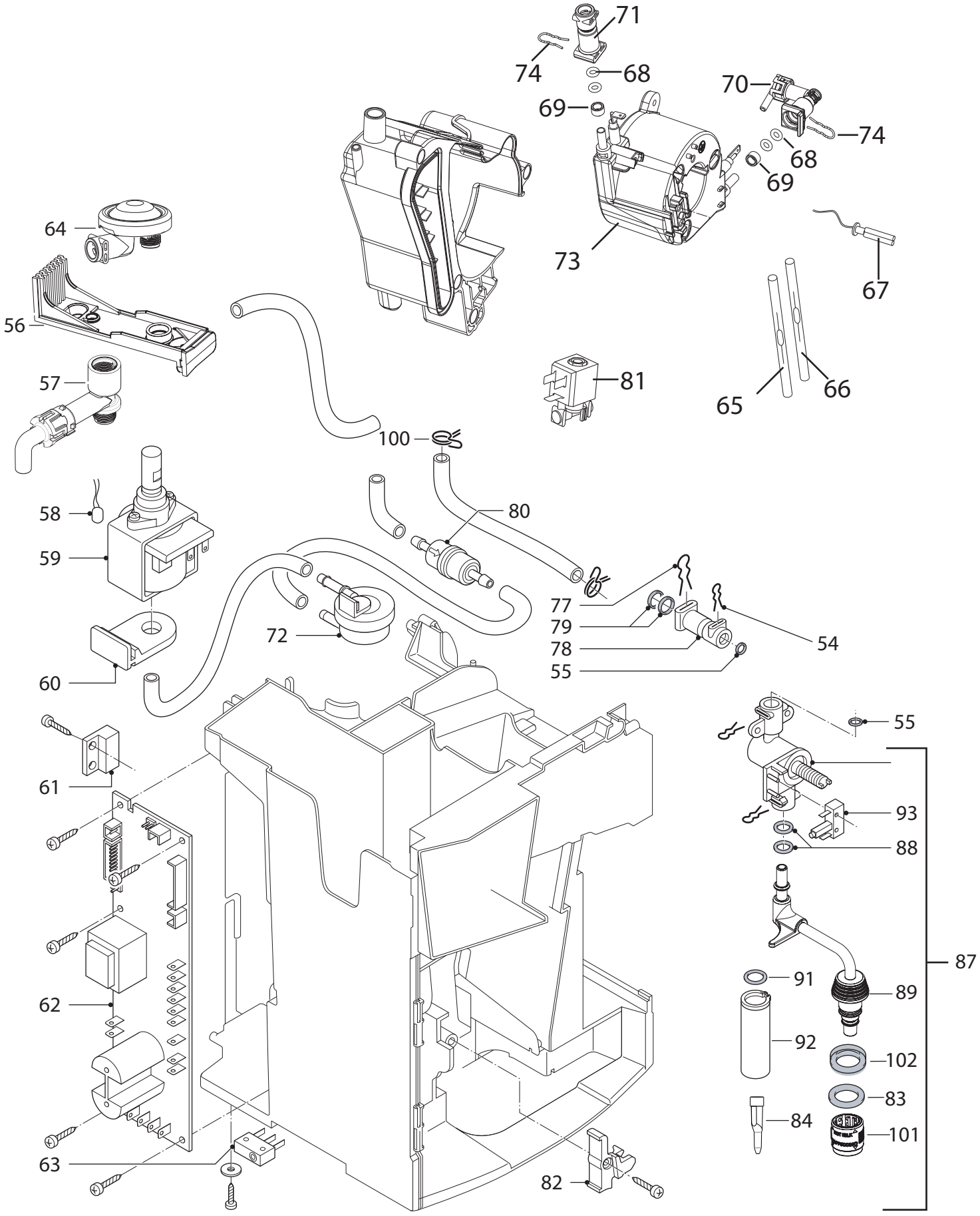
71
74
68
70
69
74
68
69
73
67
64
56
57
81
65
66
100
58
80
59
77
79
78
55
54
72
60
55
61
93
88
87
91
89
62
92
102
83
84
101
63
82

Position	Code	description
000A	5332186200	DRAIN HOSE (90°L180)
000B	5332224100	MOTOR BELT
000C	5332238300	DRAIN HOSE (90° L=180)
000D	5513212881	TUBE WITH 2 BUSHES (L270)
000E	5313283911	TUBE
000F	5013252911	WIRING FOR FLOWMETER (L630)
000G	5313215891	SCUFF-PROOF RUBBER PAD
000H	5313218941	GENERATOR SUPPORT
000I	5313222451	TUBE (L110)
000J	6113210111	FIXING BRACKET (TCO)
000K	6113210121	SENSOR BRACKET
000L	5313222461	TUBE (L160)
000M	5313219181	GRINDER BELLOW GASKET
000N	6913210021	SOLENOID VALVE SUPPORT (2V)
000O	6913210031	SOLENOID VALVE SUPPORT (3V)
000P	6913210011	POD SUPPORT
000Q	5032110800	POWER SUPPLY CORD WITH PLUG (SCHUKO)
000R	6932103900	GRID
000S	5313239751	GRINDER PANEL
000T	IT1000	PORTABLE DIGITAL THERMOMETER (-50°C +150°C)
000U	AS00000378	ECOMULTICLEAN 10ML VIAL
000V	6913210111	FRONT BRACKET DEGREASED ESAM69
00AA	5332224100	MOTOR BELT
00AB	5332164700	RUNNER FRAME
00AC	5013252911	WIRING FOR FLOWMETER (L630)
00AD	5313215891	SCUFF-PROOF RUBBER PAD
00AE	5313218941	GENERATOR SUPPORT
00AF	6113210111	FIXING BRACKET (TCO)
00AG	6113210121	SENSOR BRACKET
00AH	6913210021	SOLENOID VALVE SUPPORT (2V)
00AI	6913210031	SOLENOID VALVE SUPPORT (3V)
00AJ	6913210011	POD SUPPORT
00AK	5032110800	POWER SUPPLY CORD WITH PLUG (SCHUKO)
00AL	6932103900	GRID
00AM	5313231191	RIGHT ANGLE DOUBLE INLET CONNECTION
00AN	AS13200107	COVER ASSEMBLY

00AO	5332238300	DRAIN HOSE (90° L=180)
00AP	5313219181	GRINDER BELLOW GASKET
00AQ	SER0354	GREASE TUBE (5GR VERKOFOOD)
00AR	5313239751	GRINDER PANEL
00AS	IT1000	PORTABLE DIGITAL THERMOMETER (-50°C +150°C)
00AT	5332261200	GASKET
00AU	5513211891	SCRAPER BRUSH WITH BRISTLES
00AV	AS00000378	ECOMULTICLEAN 10ML VIAL
00AW	5332186200	DRAIN HOSE (90°L180)
00AX	5332115400	SILICONE HOSE (DI=5 L=145)
00AY	5313283721	TUBE (DI=7 DE=10 L=120)
00AZ	5313249311	SILICONE HOSE (DI=3 DE=5,5 L15)
00BA	6913210111	FRONT BRACKET DEGREASED ESAM69
00BB	5513213761	TUBE WITH 2 BUSHES (L190)
00BC	5513213501	TUBE WITH 2 BUSHES (L150)
00BD	AS13200107	COVER ASSEMBLY
00BE	5332164700	RUNNER FRAME
00BF	5332110600	TUBE (DI=4 L=220)
00BG	5332150700	SILICONE HOSE (DI=4 L=55)
00BH	5332174600	SILICONE HOSE (DI=5 L=270)
00BI	5513211891	SCRAPER BRUSH WITH BRISTLES
00BK	5513213801	TUBE WITH 2 BUSHES (L180)
00BL	5313231191	RIGHT ANGLE DOUBLE INLET CONNECTION
00BM	5332188600	SILICONE HOSE (DI=3.5 DE=6 L=14.5)
1	5332187300	COVER
2	5332187200	COVER
4	AS13200015	UPPER COVER
5	5332187500	LEFT SIDE
6	5913210471	GRINDING ADJUSTMENT KNOB
7	5532146600	TANK
8	5313220261	REAR PANEL
9	5332187400	RIGHT SIDE
11	NOCODE04	SEE TECHNICAL BULLETIN
12	7313220731	DOOR ASSEMBLY
13	5332142600	HOOK
14	5313251481	WATER TANK COVER
15	AS13200255	WATER TANK

16	5313214841	WATER TANK FRONT PIECE
17	6013210441	CUP HOLDER
18	5313214961	CUP HOLDER TRAY
19	5332225000	BOTTOM
20	5332266600	FLOAT
23	5213219371	DISPLAY BOARD
27	7313222171	CONTROL PANEL ASSEMBLY WITHOUT BOARD
29	5513222461	STEAM KNOB
30	6013213181	FILTER (D.40X2.3 TAI-FENG)
31	5332149100	O-RING
32	7313251441	INFUSER
34	5513227971	GRINDER ASSEMBLY (2D-DL 230V)
0035	5313284261	SUPPORT
36	6132104700	SPRING (x micro 12 x 5)
37	5132105700	MICROSWITCH
38	7332166600	SLIDER
39	5332142400	BUSH
40	5332142300	BUSH
42	5313217751	O-RING BLACK (D=6.07 T=1.78)
43	5332213000	PIN
44	5332148400	VALVE
45	6132106900	SPRING
46	5313276531	GASKET
47	5332139200	FILTER
48	5513227941	GENERATOR (R1200W 230V)
50	5132110500	MICROSWITCH (250V 85°)
51	5213213971	HALL SENSOR (L620)
52	5313243071	TOOTHED BELT
53	5513227951	TRANSMISSION ASSEMBLY (CHIAPHUA 230V)
54	6132101300	SPRING
55	5313217701	O-RING (D=3.85 T=2)
56	5313216501	PUMP SUPPORT
57	7313219421	SAFETY VALVE
58	5213211801	PUMP PROTECTOR
59	5113270612	PUMP (230V)
60	534848	SUPPORT
61	5232104600	REED SENSOR
62	5213213471	POWER BOARD (SW1.0 230V)

63	5132105400	MICROSWITCH (10A/ 250V/ 125°)
64	5513230831	FLOW REGULATOR
65	5013252551	TCO WITH WIRING
66	5013252561	TCO WITH WIRING
67	5217100200	SENSOR (NTC L400)
69	5332239300	SPACER
70	5313218931	RIGHT ANGLE GENERATOR CONNECTION
072	5213225251	FLOWMETER
73	5513236251	BOILER (230V)
074	6113213191	CLIP (WIRE 1,2 AISI302)
075	7313217261	MOTOR WITH PULLEY (ECM 230V)
78	5332239200	CONNECTOR
79	5313228791	GENERATOR GASKET
080	5513220521	IMPURITY FILTER
81	5513225701	SOLENOID VALVE KIT (2VA 230V)
83	5313219281	O-RING (D=13.1 T=2.62)
84	5332284200	LOWER TUBE
85	7313219671	MECHANICS VALVE (ESAM04...)
87	7313218781	VALVE ASSEMBLY WITH FROTHER
88	5313219271	O-RING (D11 91 T2.62)
89	5513213981	FROTHER TUBE
91	535693	GASKET (D=9,25 T=1,78)
92	5513212401	FROTHER TUBE
93	5113210421	MICROSWITCH
94	5332139800	LEVER
95	6132103500	SPRING
096	9812631250	SCREW (3.5X12)
97	5313277681	STOPPER
98	5313268011	VALVE
99	6132112200	SPRING
100	9824800014	CLIP CLAMP (9.30-9.10-8.80)
101	53132C8498	RING
102	5313224911	FROTHER GASKET