0132212095

DE LONGHI “INT/A/RU/SKA/EST/TR” ESAM2200.S EX:1

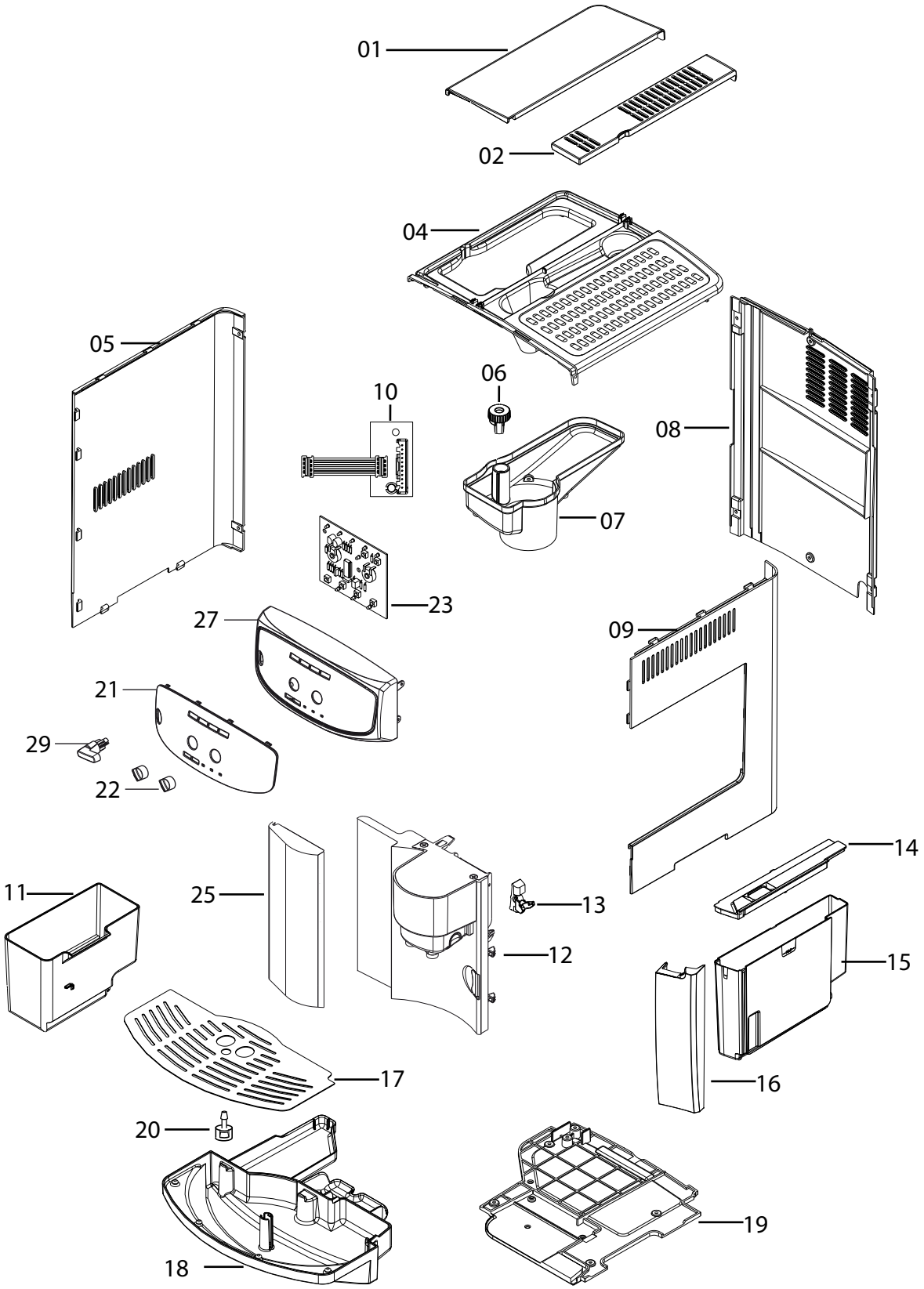

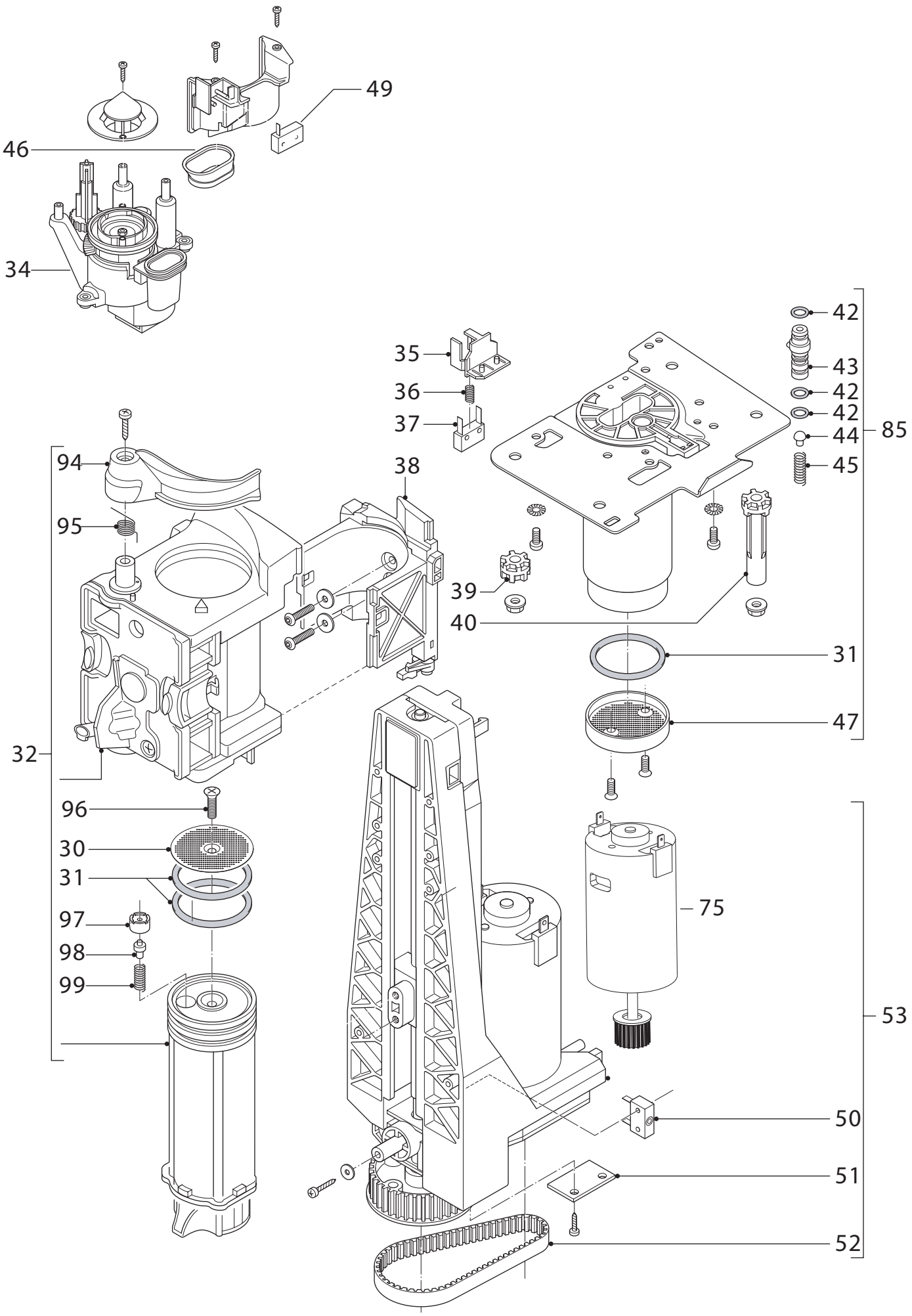
49
46
34
42
43
42
42
44
85
45
35
36
37
94
38
95
39
40
31
47
32
96
30
31
97
98
99
75
53
50
51
52

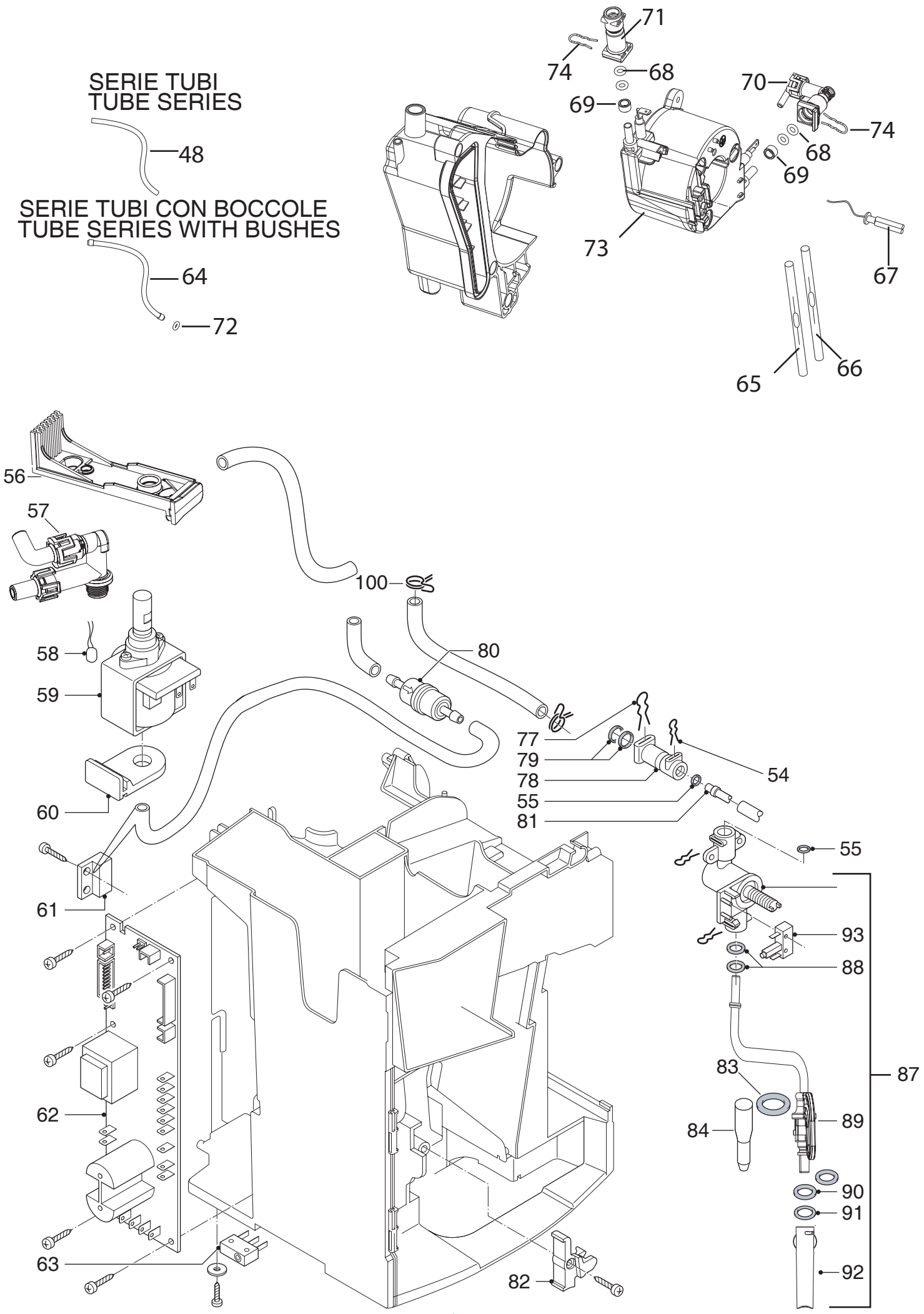
SERIE TUBI
TUBE SERIES
48
SERIE TUBI CON BOCCOLE
TUBE SERIES WITH BUSHES
64
72
71
74
68
69
70
74
68
69
73
67
65
66
56
57
100
58
59
80
77
79
78
55
81
54
60
61
55
93
88
83
87
84
89
90
91
92
62
63
82

Position	Code	description
00BC	5513211891	SCRAPER BRUSH WITH BRISTLES
00BD	AS00000378	ECOMULTICLEAN 10ML VIAL
00BE	5332115400	SILICONE HOSE (DI=5 L=145)
00BF	5313283721	TUBE (DI=7 DE=10 L=120)
00BG	5313249311	SILICONE HOSE (DI=3 DE=5,5 L15)
00BH	6913210111	FRONT BRACKET DEGREASED ESAM69
0AAA	5332108700	GASKET
0AAB	53132C8163	DISPENSER GLASS
0ABA	5332108700	GASKET
0ABB	5032514800	FLOWMETER WIRING (L 470)
0ACA	5032514800	FLOWMETER WIRING (L 470)
0ACB	5332186200	DRAIN HOSE (90°L180)
0ADA	5313210401	FINGER STOP COVER (B)
0ADB	5332224100	MOTOR BELT
0AEA	5332186200	DRAIN HOSE (90°L180)
0AEB	5332238300	DRAIN HOSE (90° L=180)
0AFA	5332224100	MOTOR BELT
0AFB	5213225251	FLOWMETER
0AGA	AS13200107	COVER ASSEMBLY
0AGB	5213225251	FLOWMETER
0AHA	5332164700	RUNNER FRAME
0AHB	5332164700	RUNNER FRAME
0AIA	5013252911	WIRING FOR FLOWMETER (L630)
0AIB	5013252911	WIRING FOR FLOWMETER (L630)
0AJA	5313215891	SCUFF-PROOF RUBBER PAD
0AJB	5313215891	SCUFF-PROOF RUBBER PAD
0AKA	5313218941	GENERATOR SUPPORT
0AKB	5313218941	GENERATOR SUPPORT
0ALA	53132C8163	DISPENSER GLASS
0ALB	6113210111	FIXING BRACKET (TCO)
0AMA	5332177900	COVER
0AMB	6113210121	SENSOR BRACKET
0ANA	5513211891	SCRAPER BRUSH WITH BRISTLES
0ANB	6913210021	SOLENOID VALVE SUPPORT (2V)
0AOA	6113210111	FIXING BRACKET (TCO)
0AOB	6913210031	SOLENOID VALVE SUPPORT (3V)
0APA	6113210121	SENSOR BRACKET

0APB	6913210011	POD SUPPORT
0AQA	5313219181	GRINDER BELLOW GASKET
0AQB	5313222211	KEYBOARD
0ARA	6913210021	SOLENOID VALVE SUPPORT (2V)
0ARB	5032110800	POWER SUPPLY CORD WITH PLUG (SCHUKO)
0ASA	6913210031	SOLENOID VALVE SUPPORT (3V)
0ASB	6932103900	GRID
0ATA	5332177900	COVER
0ATB	6913210011	POD SUPPORT
0AUA	5332238300	DRAIN HOSE (90° L=180)
0AUB	5313222211	KEYBOARD
0AVA	5032110800	POWER SUPPLY CORD WITH PLUG (SCHUKO)
0AVB	AS13200107	COVER ASSEMBLY
0AWA	6932103900	GRID
0AWB	5332152000	GLASS HANDLE
0AXA	5313219181	GRINDER BELLOW GASKET
0AXB	5313239751	GRINDER PANEL
0AYA	SER0354	GREASE TUBE (5GR VERKOFOOD)
0AYB	5332152000	GLASS HANDLE
0AZA	5313239751	GRINDER PANEL
0AZB	IT1000	PORTABLE DIGITAL THERMOMETER (-50°C +150°C)
0BAA	IT1000	PORTABLE DIGITAL THERMOMETER (-50°C +150°C)
0BAB	AS00000378	ECOMULTICLEAN 10ML VIAL
0BBA	5332261200	GASKET
0BBB	6913210111	FRONT BRACKET DEGREASED ESAM69
1	5332143500	COVER
2	5332143400	COVER
4	7313224511	UPPER COVER
5	5332143900	LEFT SIDE
6	5913210471	GRINDING ADJUSTMENT KNOB
7	5532146600	TANK
8	5313218991	REAR PANEL
9	5332143800	RIGHT SIDE
10	5213212291	BOARD
11	NOCODE04	SEE TECHNICAL BULLETIN
12	7313220621	DOOR ASSEMBLY

13	5332142600	HOOK
14	5313251471	COVER
15	AS13200251	WATER TANK
16	5332151700	PROFILE
17	6032105000	CUP HOLDER
18	5332144200	CUP HOLDER TRAY
19	5332225000	BOTTOM
20	5332266300	FLOAT
21	5913211631	CONTROL PANEL FRONT PIECE
22	5313235491	CONTROL KNOB
023A	5213213011	CONTROL BOARD (8 PIN)
023B	AS00000621	ELECTRONIC CONTROL BOARD
25	5332151600	COVER
27	5332263700	CONTROL PANEL
29	5513222501	STEAM KNOB
30	6013213181	FILTER (D.40X2.3 TAI-FENG)
31	5332149100	O-RING
32	7313251441	INFUSER
34	5513227971	GRINDER ASSEMBLY (2D-DL 230V)
0035	5313284261	SUPPORT
36	6132104700	SPRING (x micro 12 x 5)
37	5132105700	MICROSWITCH
38	7332166600	SLIDER
39	5332142400	BUSH
40	5332142300	BUSH
42	5313217751	O-RING BLACK (D=6.07 T=1.78)
43	5332213000	PIN
44	5332148400	VALVE
45	6132106900	SPRING
46	5313276531	GASKET
47	5332139200	FILTER
048A	5332110600	TUBE (DI=4 L=220)
048B	5332150700	SILICONE HOSE (DI=4 L=55)
048C	5332174600	SILICONE HOSE (DI=5 L=270)
048D	5313283911	TUBE
50	5132110500	MICROSWITCH (250V 85°)
51	5213213971	HALL SENSOR (L620)
52	5313243071	TOOTHED BELT

53	7313292547	TRANSMISSION (CHIAPHUA 230V)
54	6132101300	SPRING
56	5313216501	PUMP SUPPORT
57	7313219431	SAFETY VALVE
58	5213211161	PUMP PROTECTOR
59	5113270612	PUMP (230V)
60	534848	SUPPORT
61	5232104600	REED SENSOR
62	AS13200036	POWER BOARD (SW1.1 230V)
63	5132105400	MICROSWITCH (10A/ 250V/ 125°)
64	5513213801	TUBE WITH 2 BUSHES (L180)
65	5013251401	TCO WITH WIRING
66	5013251931	TCO WITH WIRING
67	5217100200	SENSOR (NTC L400)
68	5313228791	GENERATOR GASKET
69	5332239300	SPACER
70	5313218931	RIGHT ANGLE GENERATOR CONNECTION
72	5313217701	O-RING (D=3.85 T=2)
73	5513236251	BOILER (230V)
075	7313217261	MOTOR WITH PULLEY (ECM 230V)
077	6113213191	CLIP (WIRE 1,2 AISI302)
78	5332239200	CONNECTOR
80	5513220521	IMPURITY FILTER
83	5313219281	O-RING (D=13.1 T=2.62)
84	5332113800	LOWER TUBE
85	AS13200007	MECHANICS VALVE (ESAM)
87	AS13200153	VALVE ASSEMBLY WITH FROTHER
88	5332144800	O-RING (D=6)
89	5513213371	FROTHER TUBE
90	5313219271	O-RING (D11 91 T2.62)
91	535693	GASKET (D=9,25 T=1,78)
92	5332229600	COVER
93	5113210421	MICROSWITCH
94	5332139800	LEVER
95	6132103500	SPRING
096	9812631250	SCREW (3.5X12)
97	5313277681	STOPPER
98	5313268011	VALVE

99	6132112200	SPRING
100	9824800014	CLIP CLAMP (9.30-9.10-8.80)