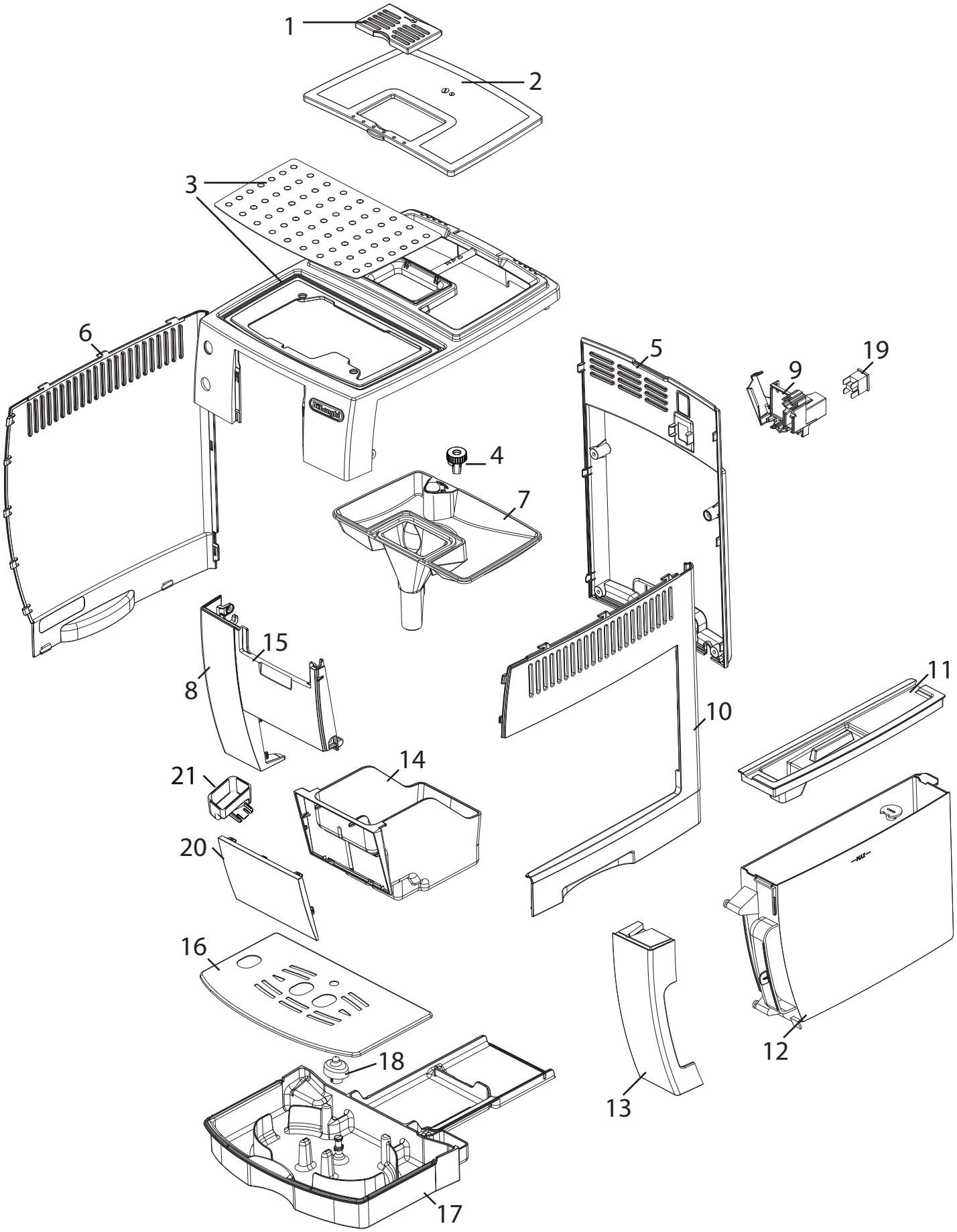
1
2
3
6
5
9
19
4
7
15
8
10
11
21
14
20
16
18
13
12
17

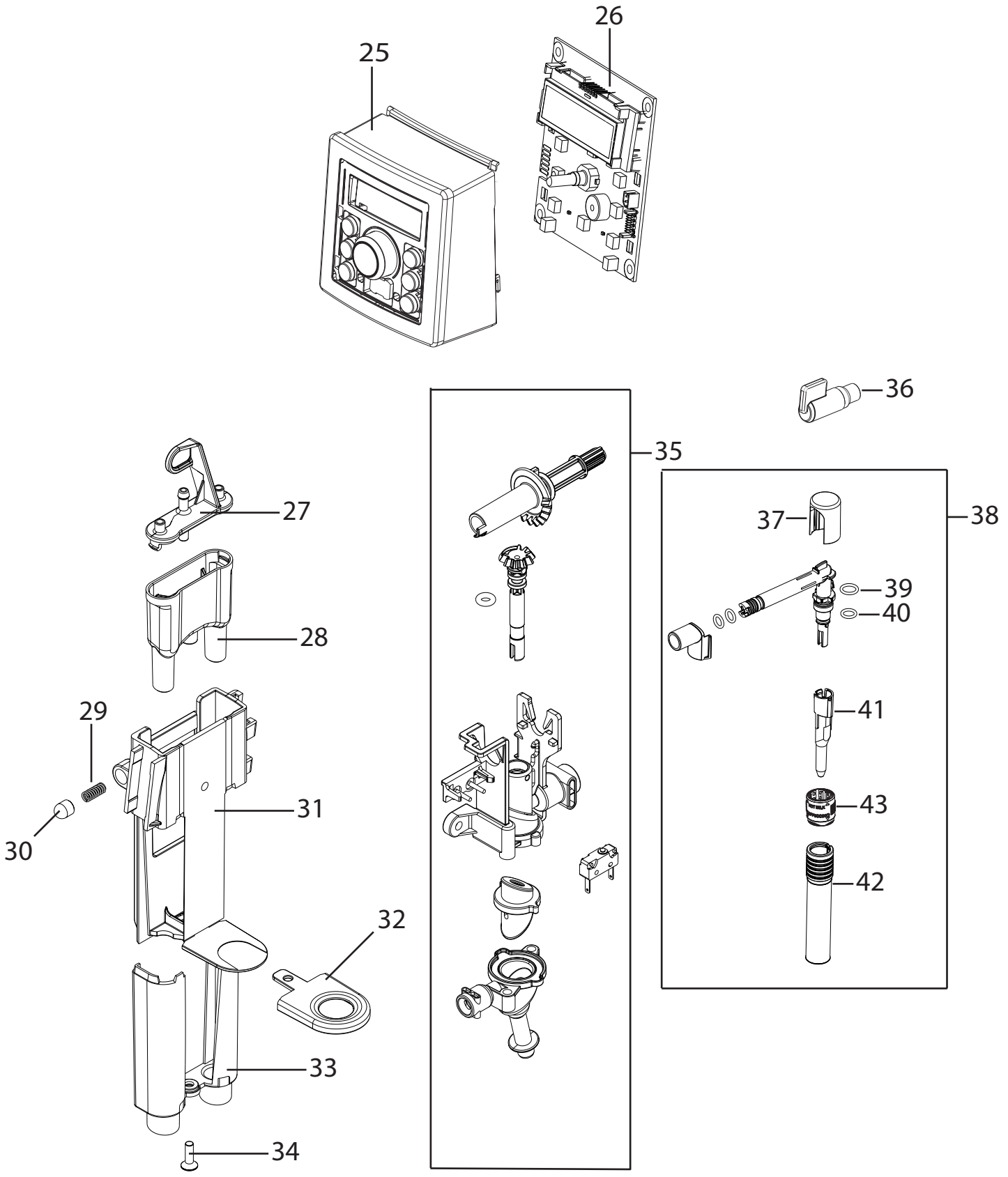
25
26
36
35
27
28
29
30
31
32
33
34
37
38
39
40
41
43
42

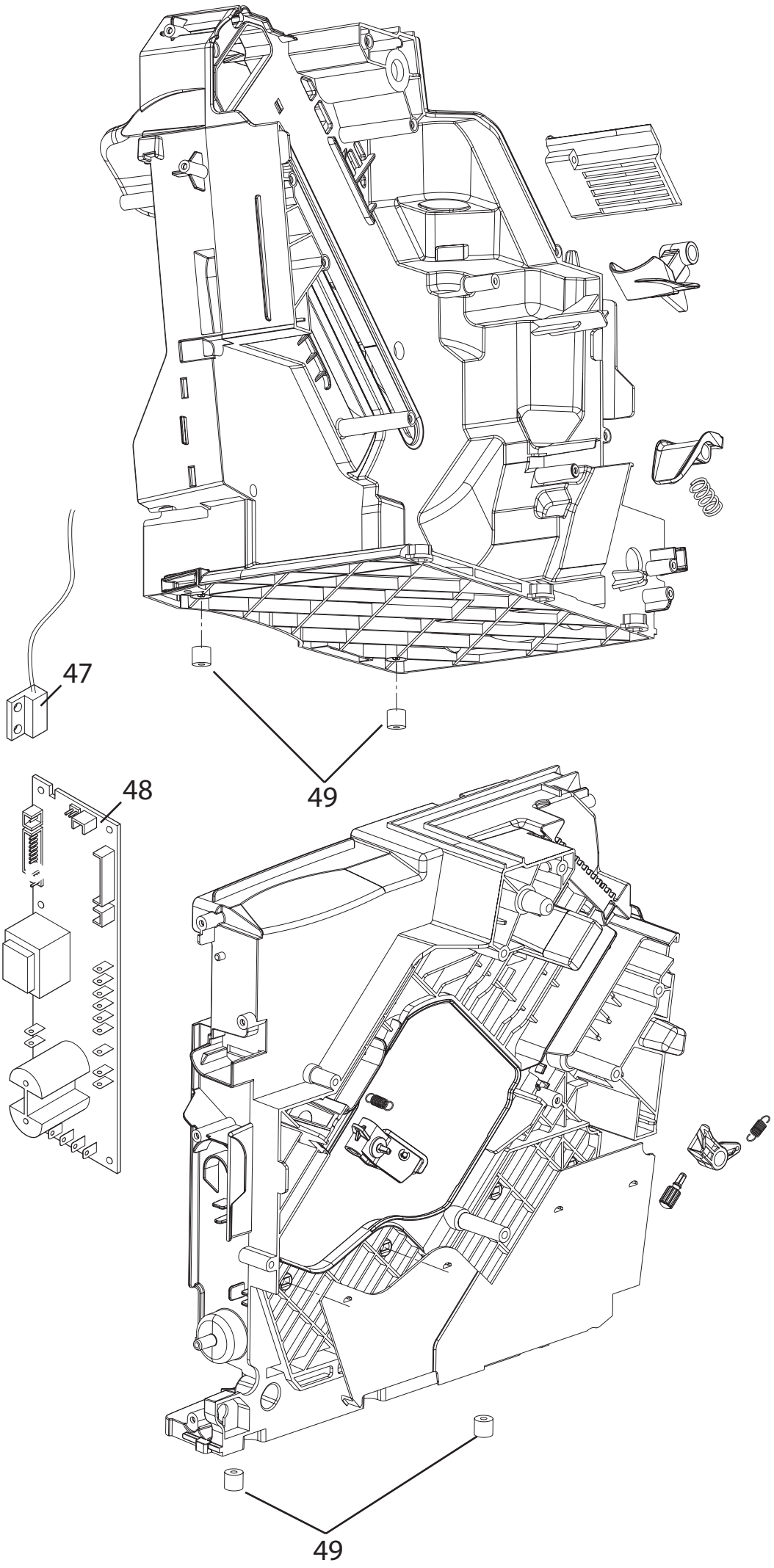
47
48
49
49

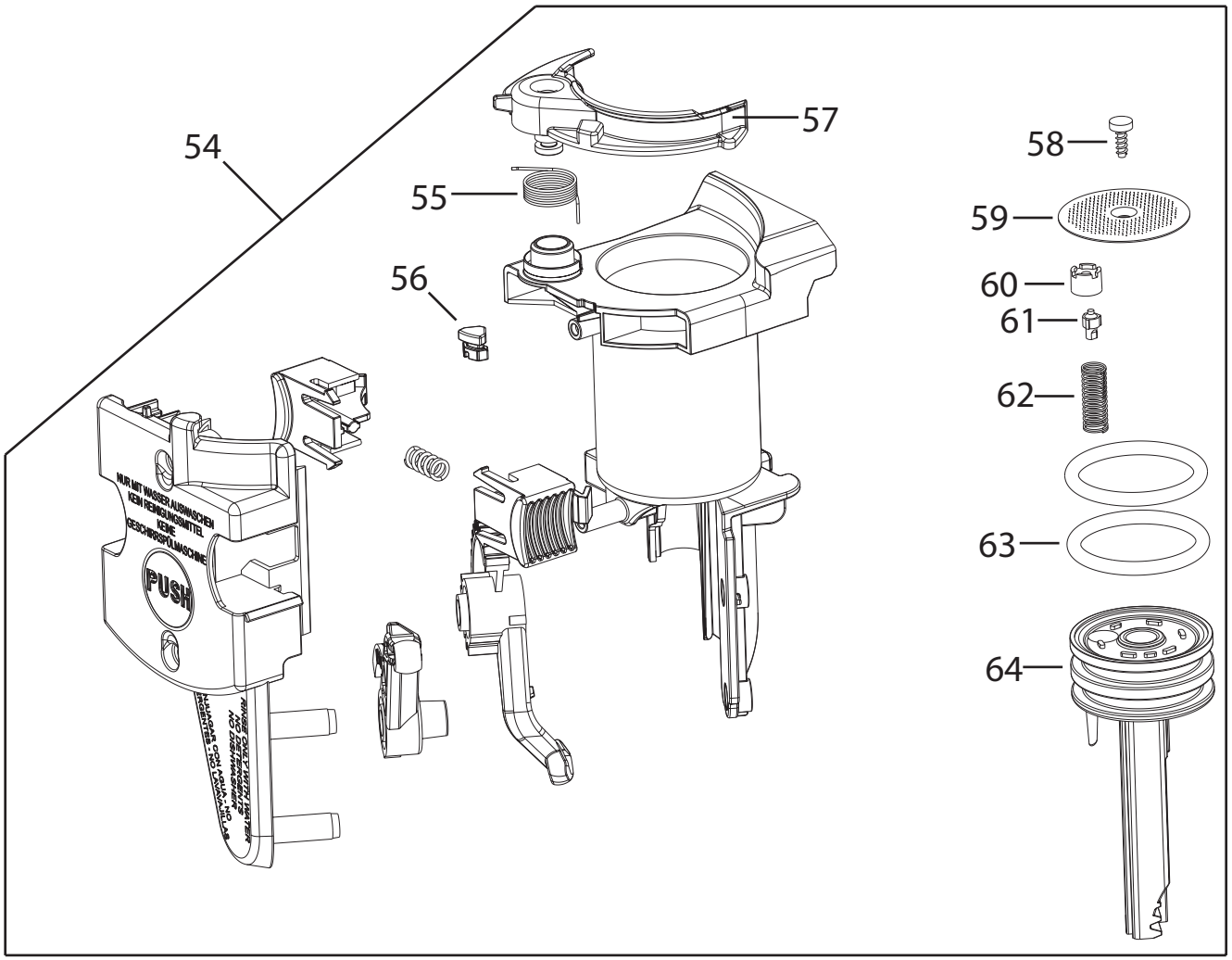
54
57
58
55
59
56
60
61
62
63
64
PUSH

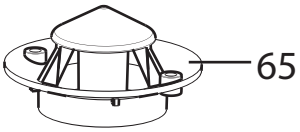
65

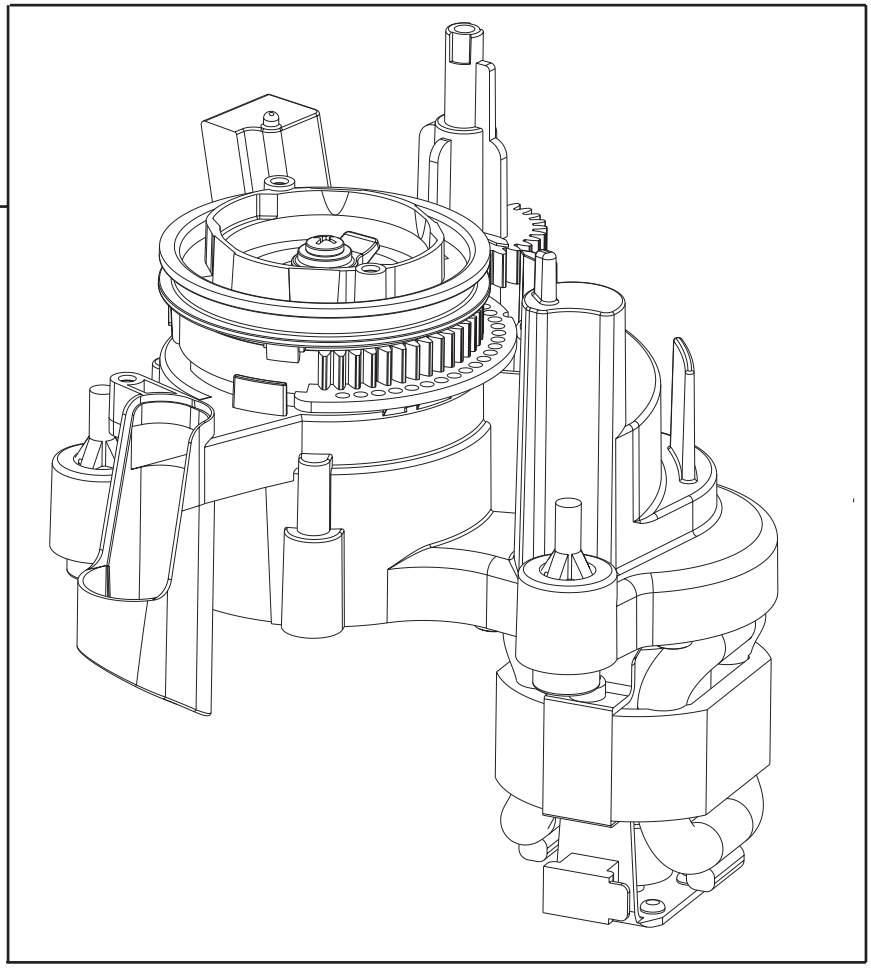
66

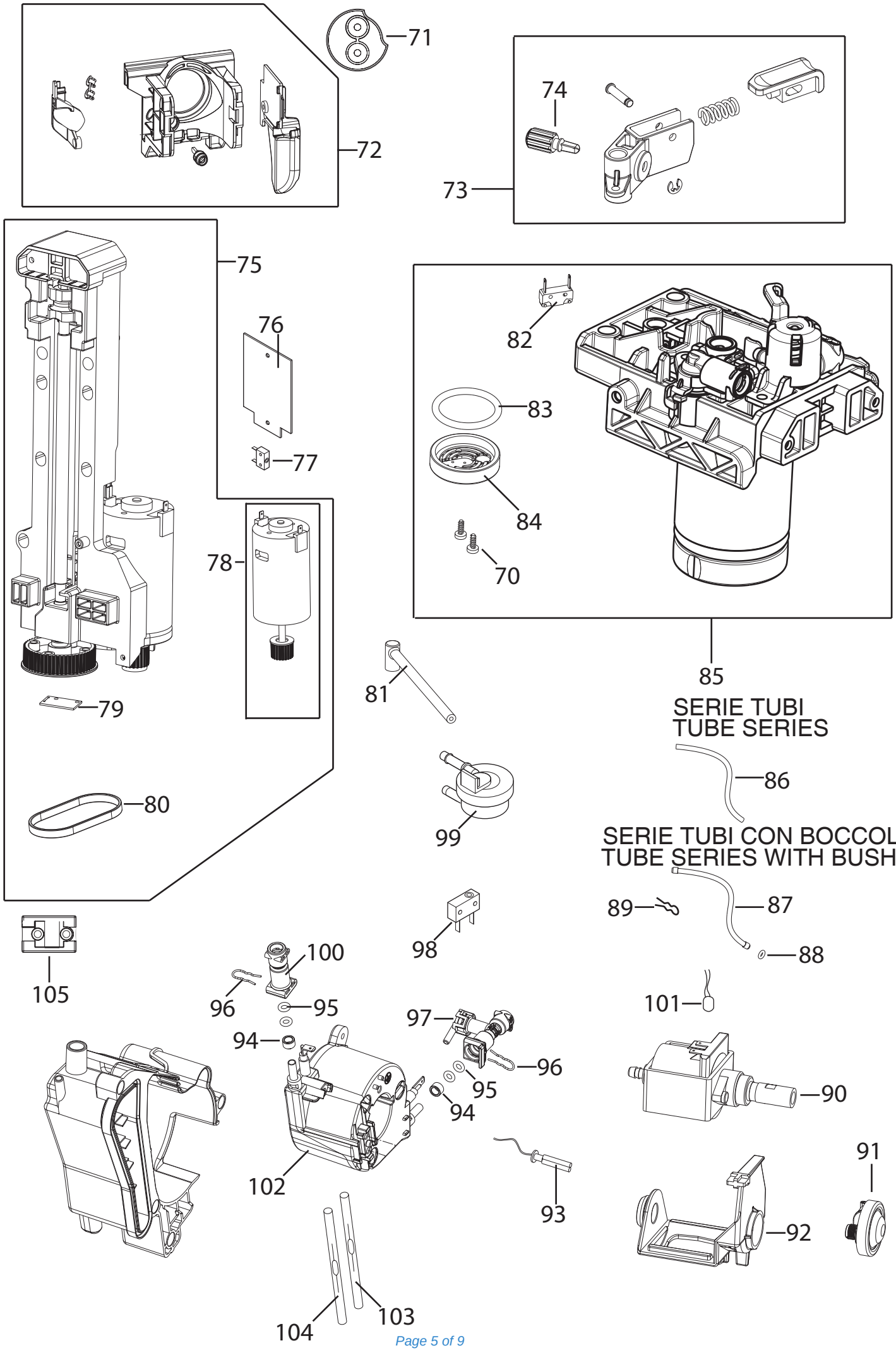
71
72
74
73
75
76
77
78
79
80
82
83
84
70
85
SERIE TUBI
TUBE SERIES
86
SERIE TUBI CON BOCCOLE
TUBE SERIES WITH BUSHES
87
88
89
81
99
98
105
100
96
95
94
97
96
95
94
101
90
102
93
91
92
104
103

Position	Code	description
000A	533135	GASKET (D=7,66 T=1,78)
000B	NOCODE04	SEE TECHNICAL BULLETIN
000C	NOCODE04	SEE TECHNICAL BULLETIN
000D	5032111900	POWER SUPPLY CORD WITH PLUG (SCHUKO)
000E	5313256701	GENERATOR COVER
000F	5332224100	MOTOR BELT
000G	5013251461	WIRING FOR FLOWMETER (L300)
000H	5513211891	SCRAPER BRUSH WITH BRISTLES
000I	6113210111	FIXING BRACKET (TCO)
000J	6113210121	SENSOR BRACKET
000K	5313219181	GRINDER BELLOW GASKET
000L	SER0354	GREASE TUBE (5GR VERKOFOOD)
000M	5313213451	COFFEE HOSE CLAMP
000N	AS00006031	GRINDER FINGER STOP RING
000O	IT1000	PORTABLE DIGITAL THERMOMETER (-50°C +150°C)
000P	AS00000378	ECOMULTICLEAN 10ML VIAL
000Q	6013211721	PLATE
001	5313221031	GROUND COFFEE TANK COVER
002	AS00010434	COFFEE BEANS COVER
003	7313232401	UPPER COVER
005	5313219941	REAR PANEL
006	5313219921	LEFT SIDE
007	AS00001792	COFFEE BEANS TANK
008	5313231241	LEFT FRONT PIECE
009	AS00006115	SWITCH HOLDER
010	5313219931	RIGHT SIDE
011	AS00009990	DLS-COVER TANK SMOKE(C8-11)(SAN) ECAM
012	AS13200250	TANK
012A	AS00010091	WATER TANK
013	5313231251	WATER TANK FRONT PIECE
014	AS00008460	DLS-CONT COF.GROUNDS BK(ABS)+BAG ECAM37
015	5313224671	FRONT PIECE
016	6013216181	CUP HOLDER
017	5313231271	CUP HOLDER TRAY
018	5313222641	FLOAT
019	5132112500	SWITCH

020	5313215181	COFFEE GROUNDS CONTAINER FRONT
021	5313213551	DRAIN TRAY
025	7313224871	CONTROL PANEL ASSEMBLY WITHOUT BOARD
026	5513220031	BOARD
027	5313213911	COFFEE OUTLET TANK COVER
028	5313213901	COFFEE OUTLET TANK
029	6132106200	SPRING
030	5332227400	REGULATOR
031	5313213881	GUIDE DISPENSER COVER
032	5313215321	DISPENSER HANDLE
033	5313215311	CONVEYOR EXTERNAL PART
034	9812631250	SCREW (3.5X12)
035	AS00008315	STEAM VALVE
036	5513222431	STEAM KNOB
037	5313215291	FROTHER COVER
038	7313212931	ADJUSTABLE FROTHER
039	53132D0730	O RING
040	5313217751	O-RING BLACK (D=6.07 T=1.78)
041	5313214381	FROTHER INTERNAL TUBE
042	5513213751	FROTHER TUBE
043	53132C8498	RING
047	AS00008952	REED SENSOR
048	5213216651	POWER BOARD (SW1.3 230V)
049	532233	RUBBER PAD
054	7313251451	INFUSER
055	6113210131	SPRING
056	5313213241	EXPULSION LEVER RUBBER PAD
057	5313213191	EXPULSION LEVER
058	9812631250	SCREW (3.5X12)
059	6013213181	FILTER (D.40X2.3 TAI-FENG)
060	5313277681	STOPPER
061	53132C9532	FROTH DEVICE VALVE NATURAL(PSU)ESAM&ECAM
062	6132112200	SPRING
063	5313238581	GASKET
064	5313213211	BOTTOM PISTON
065	5313227651	FINGER STOP COVER
066	AS00002955	GRINDER ASSEMBLY

070	9812631250	SCREW (3.5X12)
071	5313213591	TROLLEY SLEWING RING
072	AS00006298	TROLLEY
073	7313295821	COMPENSATION SYSTEM
074	5313213431	GASKET
075	5513228021	TRANSMISSION ASSEMBLY (ECM 230V)
076	AS00008306	DLS-PCB FILTER MOTOR(GDS-CN)230V ECAM
077	5132110500	MICROSWITCH (250V 85°)
078	7313217261	MOTOR WITH PULLEY (ECM 230V)
079	5213213971	HALL SENSOR (L620)
080	5313243071	TOOTHED BELT
081	5313236711	RIGHT ANGLE WATER OUTLET TUBE (90° L=190)
082	5132104100	MICROSWITCH (250V 85°)
083	5313238581	GASKET
084	5313217601	BLACK FILTER
085	5513227961	MECHANICS VALVE (DLS ECAM)
086A	5313217861	TUBE (DI=3 DE=5,5 L145)
086B	5313217871	TUBE (DI=3 DE=6 L200)
086C	5332199500	SILICONE HOSE (DI=4 DE=8 L=150)
087A	5513212871	TUBE WITH 2 BUSHES (L97)
087B	5513212881	TUBE WITH 2 BUSHES (L270)
087C	5513212891	TUBE WITH 2 BUSHES (L230)
087D	5513212901	TUBE WITH 2 BUSHES (L290)
088	5313217701	O-RING (D=3.85 T=2)
089	6132101300	SPRING
090	5113270613	PUMP (230V)
091	5513230831	FLOW REGULATOR
092	5313230671	PUMP SUPPORT
093	5213211181	SENSOR (NTC)
094	5332239300	SPACER
095	5313228791	GENERATOR GASKET
096	6113213191	CLIP (WIRE 1,2 AISI302)
097	7313219401	SAFETY VALVE
098	5113210211	MICROSWITCH
099	5213225251	FLOWMETER
100	5332239200	CONNECTOR
101	5213211161	PUMP PROTECTOR
102	5513236251	BOILER (230V)

103	5013251391	TCO WITH WIRING
104	5013251401	TCO WITH WIRING
105	5513214661	CAM SLIDER