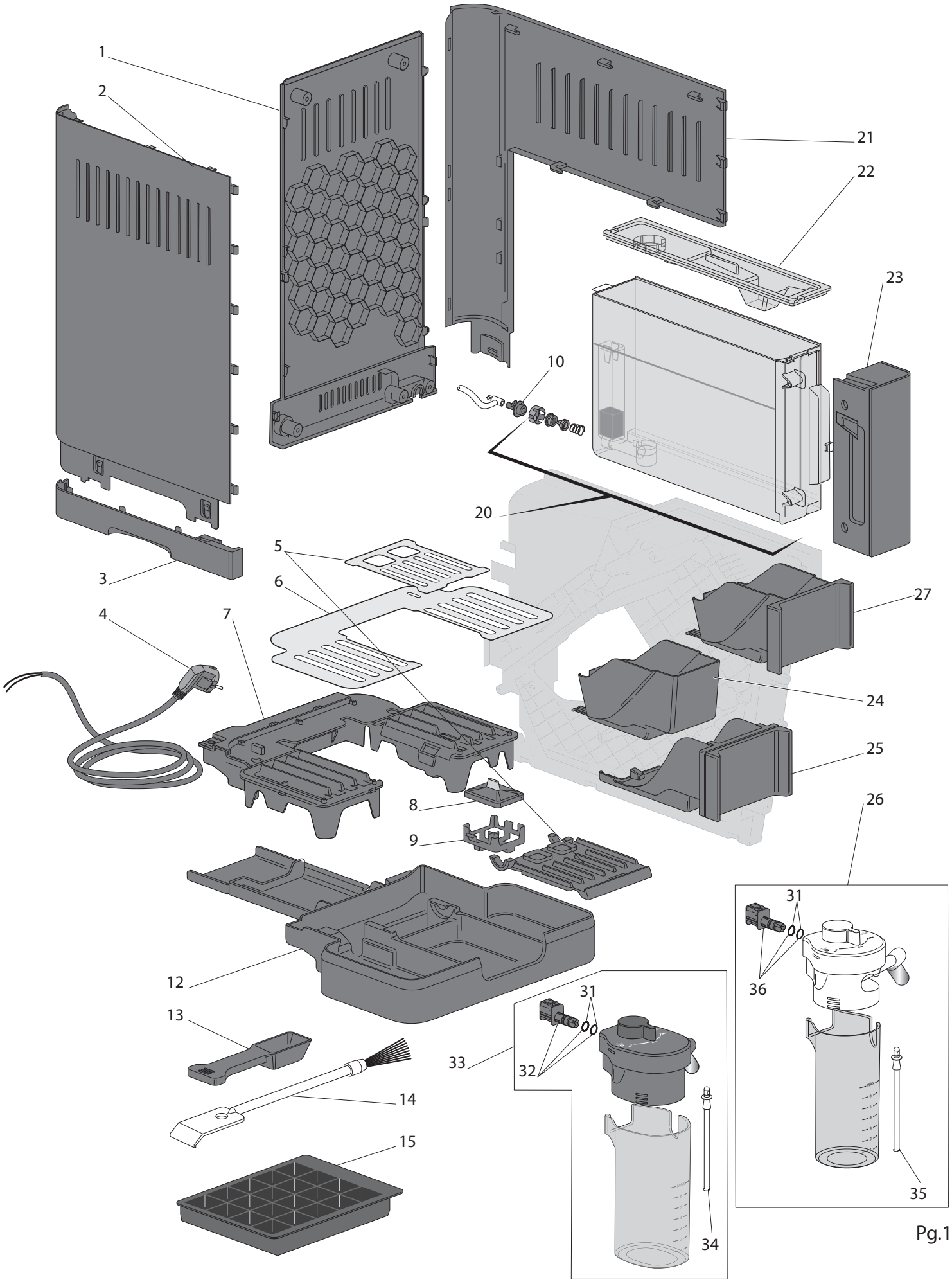
1
2
21
22
23
10
20
3
5
6
27
4
7
24
25
8
26
9
31
36
12
13
31
33
32
14
15
35
34

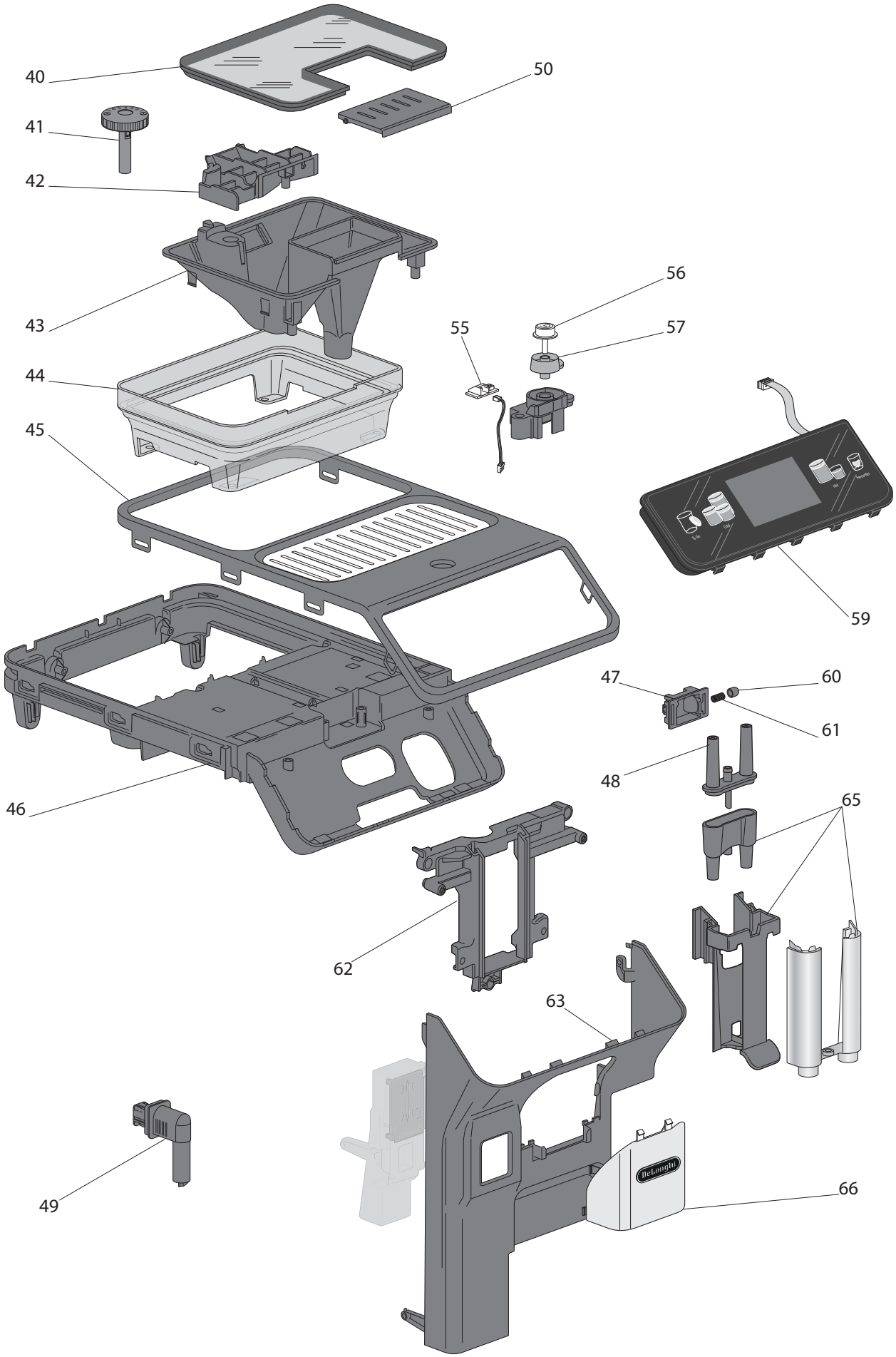
40
50
41
42
43
56
55
57
44
45
59
47
60
61
48
46
65
62
63
49
66

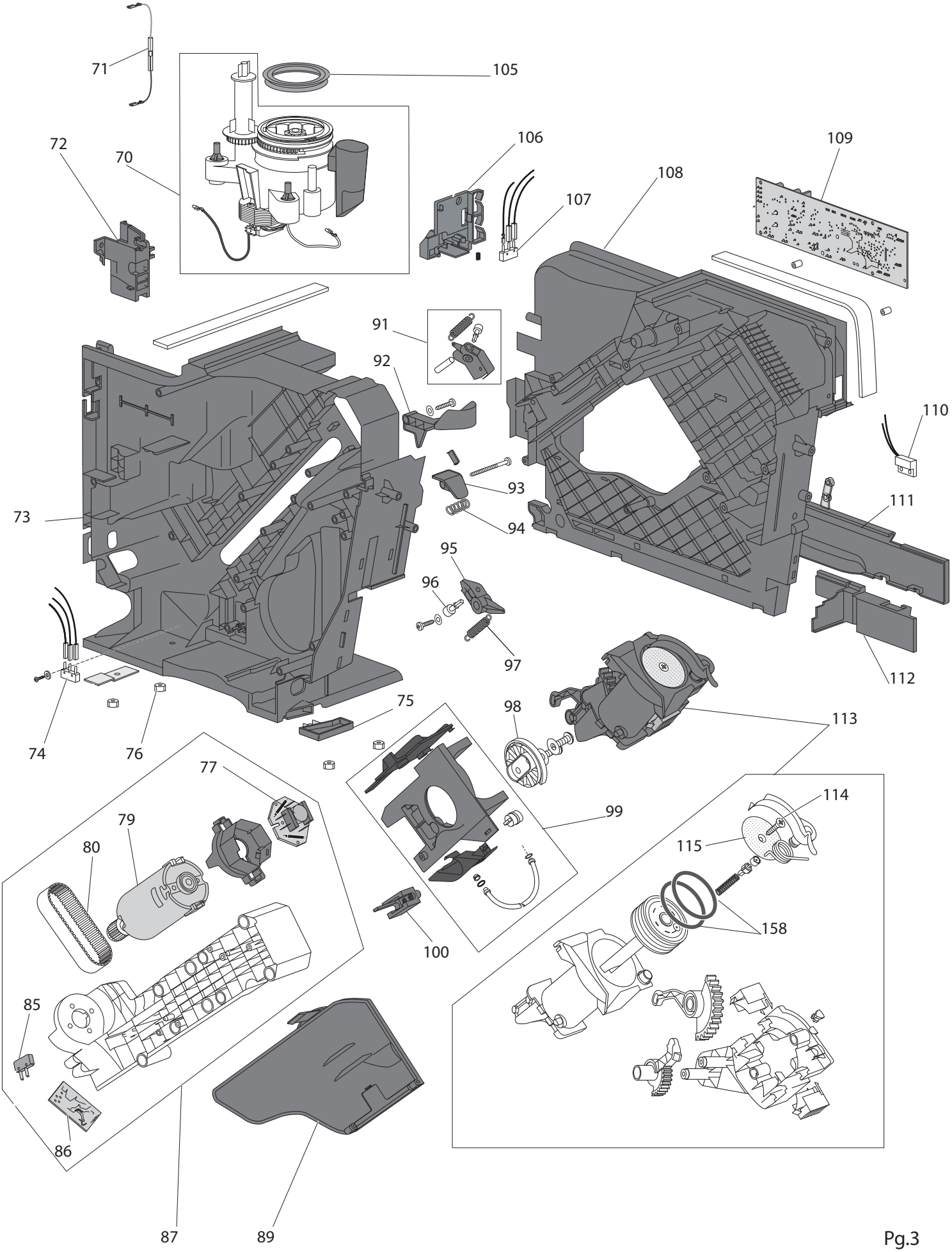
71
105
72
70
106
107
108
109
91
92
110
93
73
94
111
95
96
97
112
74
76
75
98
113
77
99
114
79
80
115
158
100
85
86
87
89

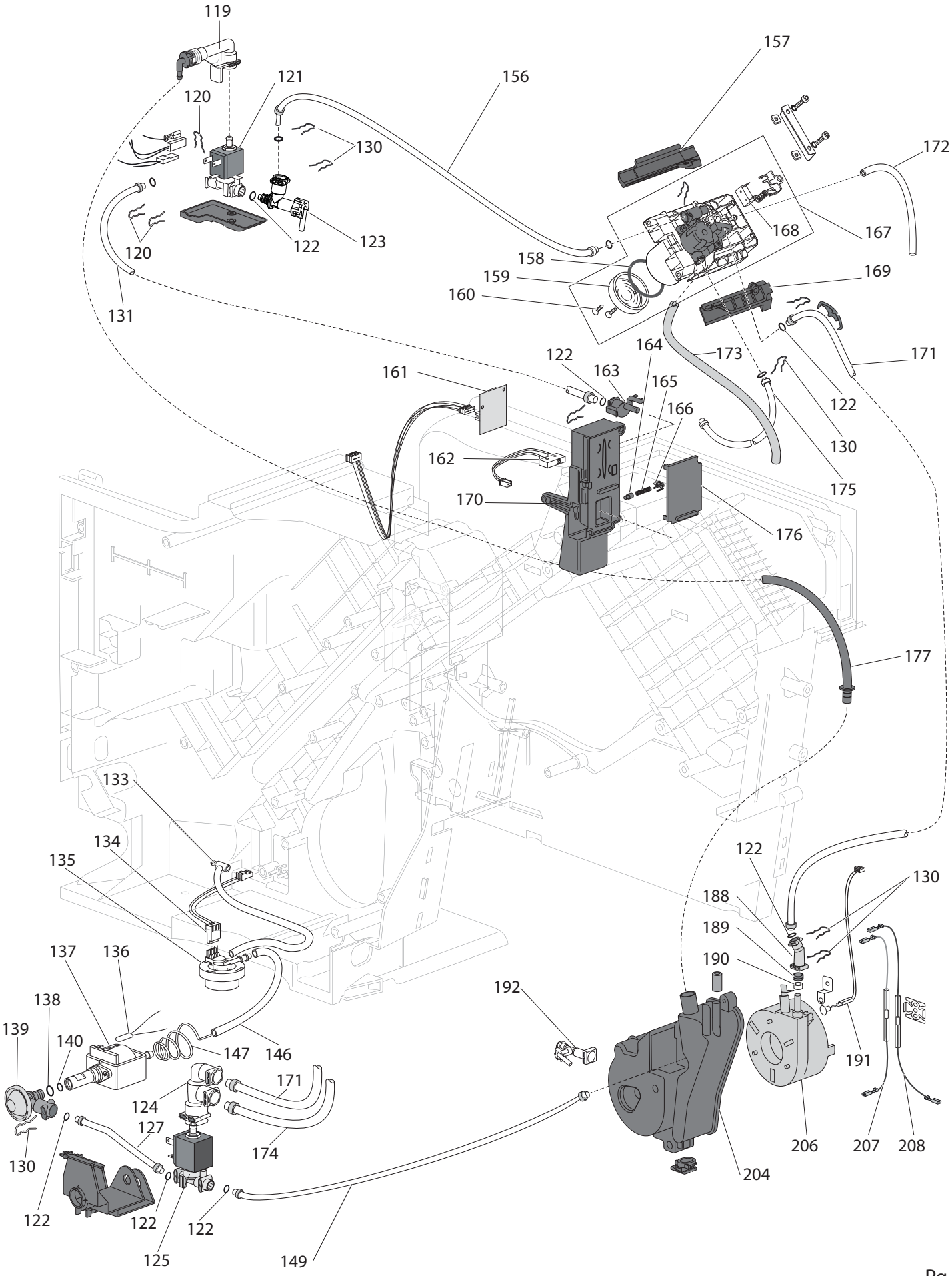
119
120
121
122
123
130
156
157
158
159
160
161
162
163
164
165
166
167
168
169
170
171
172
173
175
176
177
131
133
134
135
136
137
138
139
140
146
147
149
124
125
127
174
188
189
190
191
192
204
206
207
208

INT ECAM450.65.S EX:4

ELETTA EXPLORE ECAM450.65.S EX:4 (COLD BREW) S11

Position	Code	description
0000	5313277482	RUBBER PAD
0001	5513241411	REAR PANEL
0002	5313282371	LEFT SIDE
0003	5513241421	BASE
0004	5013213781	POWER CORD EUR PLUG
0005	AS00008304	DLS-CUPS SUP+ REMOV CUPS SUPP-DR ECAM450
0006	6013217211	CUP HOLDER
0007	5313279271	DRIP TRAY GRID
0008	5313279721	FLOAT
0009	5313279741	SUPPORT
0010	53132C8120	WATER TANK CONNECTOR
0012	5313279191	CUP HOLDER TRAY
0013	53132C9217	MEASURING SPOON
0014	5513211891	SCRAPER BRUSH WITH BRISTLES
0015	5313281401	ICE RACK
0020	AS00004201	WATER TANK ASSEMBLY
0021	5313282351	RIGHT SIDE
0022	AS00002595	WATER TANK COVER
0023	53132C7963	WATER TANK FRONT PIECE
0024	53132C9324	COFFEE GROUNDS COMPARTMENT BROWN
0025	AS00003534	COFFEE GROUNDS CONTAINER FRONT
0026	AS00005735	MILK CARAFE LATTECREMA COOL ELETTA EXPLORE
0027	AS00008230	COFFEE GROUNDS CONTAINER
0031	53132D0730	O RING
0032	7313294295	CONNECTOR
0033	AS00005734	MILK CARAFE LATTECREMA HOT ELETTA EXPLORE
0034	5313270961	MILK SUCTION TUBE
0035	5313279631	MILK SUCTION TUBE
0036	7313266981	CARAFE COUPLING
0040	53132C7972	COFFEE BEANS COVER
0041	5913222111	GRIND REGULATION KNOB
0042	5313279651	FINGER STOP GRID
0043	53132C9079	COFFEE BEANS TANK
0044	5313279691	FRAME
0045	7313266501	UPPER COVER

0046	5313279261	UPPER COVER SUPPORT
0047	AS00002629	COVER
0048	AS00002588	COFFEE OUTLET TANK COVER
0049	7313266691	HOT WATER SPOUT
0050	5313285021	GROUND COFFEE COVER
0055	5213270906	BOARD
0056	5313248181	ON/OFF KEY
0057	5313256031	GASKET
0059	7313295928	CONTROL PANEL ASSEMBLY WITH BOARD
0060	5332227400	REGULATOR
0061	6132106200	SPRING
0062	AS00002597	SUPPORT
0063	53132C7959	SUPPORT
0065	AS00002667	COFFEE DISPENSER
0066	5513241471	DISPENSER COVER
0070	7313293917	GRINDER ASSEMBLY (3D-DL 230V)
0071	5013257381	CABLING WITH FUSE (1.25 A)
0072	5313281101	TERMINAL BOARD
0073	AS00007044	LEFT FRAME
0074	5113210211	MICROSWITCH
0075	AS00002596	DRAIN TRAY
0076	5313229731	RUBBER FOOT PAD
0077	5213225571	MOTOR BOARD (230V)
0079	7313249421	MOTOR ASSEMBLY (CHIAPHUA 230V)
0080	AS00009034	TOOTHED BELT
0085	5113211001	MICROSWITCH (0,1A 250V)
0086	AS00008342	DLS-PCB HALL(L700)ALLEGRO (NPE) ECAM450
0087	5513243251	DRIVE ASSEMBLY (CHIAPHUA 230V)
0089	5313213411	DOOR
0091	7313295821	COMPENSATION SYSTEM
0092	53132C7925	MOBILE FUNNEL
0093	5313213371	PISTON LOWERING FLAP
0094	6113210201	SPRING
0095	5313213391	EXPULSION ARM
0096	5313213431	GASKET
0097	6113210181	SPRING
0098	5313213591	TROLLEY SLEWING RING
0099	AS00006298	TROLLEY

0100	5513214661	CAM SLIDER
0105	5313219181	GRINDER BELLOW GASKET
0106	AS00008494	DLS-SUPP MICRO TANK H2O BK(PC+ABS)ECAM32
0107	5113210211	MICROSWITCH
0108	AS00007043	RIGHT FRAME
0109	AS00010614	POWER+WIFI CARD
0110	5213228871	REED SENSOR
0111	5513241401	RIGHT SIDE
0112	5313279621	SUPPORT
0113	7313251451	INFUSER
0114	9812631250	SCREW (3.5X12)
0115	6013213181	FILTER (D.40X2.3 TAI-FENG)
0119	55132A1034	SAFETY VALVE
0120	6113213191	CLIP (WIRE 1,2 AISI302)
0121	5213226911	SOLENOID VALVE (3VB 230V)
0122	5313217701	O-RING (D=3.85 T=2)
0123	7313259871	L CONNECTION
0124	53132C8083	CONNECTION
0125	5213270537	SOLENOID VALVE
0127	5513213901	TUBE WITH 2 BUSHES (L320)
0130	6132101300	SPRING
0131	5513212891	TUBE WITH 2 BUSHES (L230)
0133	5313200874	RIGHT ANGLE WATER OUTLET TUBE
0134	5013258461	WIRING FOR FLOWMETER (L420)
0135	5213225251	FLOWMETER
0136	5213228821	PUMP PROTECTOR
0137	5113212531	PUMP (ARS 220-240V 70W)
0138	5313217741	O-RING (D=6.75 T=1.78)
0139	5513230831	FLOW REGULATOR
0140	5332196000	O-RING
0146	5313255381	TUBE (DI=5 DE=9 L350)
0147	6113210141	SPRING
0149	5513212881	TUBE WITH 2 BUSHES (L270)
0156	5513213501	TUBE WITH 2 BUSHES (L150)
0157	5313255101	PROTECTION
0158	5313238581	GASKET
0159	5313217601	BLACK FILTER
0160	9812631250	SCREW (3.5X12)

0161	5213228331	PCB SENSOR
0162	5113211161	MICROSWITCH
0163	5313241221	MACHINE CONNECTOR
0164	5313226361	DOOR PIN (IFD)
0165	6113212491	SPRING
0166	53132D0305	MICROSWITCH SUPPORT CAP
0167	7313267641	VALVE
0168	5132104100	MICROSWITCH (250V 85°)
0169	5313255111	PROTECTION
0170	5313279221	FRONT PANEL
0171	55132A0362	TUBE WITH 2 BUSHES (L380)
0172	5313283781	TUBE
0173	5313283891	TUBE
0174	55132A0361	TUBE WITH 2 BUSHES (L340)
0175	5513212881	TUBE WITH 2 BUSHES (L270)
0176	5313279281	DOOR
0177	5313246831	RIGHT ANGLE DRAIN CONNECTION (90° L=240)
0188	AS00007808	CONNECTION
0189	5313228791	GENERATOR GASKET
0190	5332239300	SPACER
0191	5213228851	SENSOR (NTC)
0192	AS00006118	SAFETY VALVE
0204	AS00007807	GENERATOR COVER
0206	5513239061	ROUND GENERATOR (230V1400W F6.3)
0207	5013257151	TCO WITH WIRING (L390 - L130)
0208	5013258421	TCO WITH WIRING (L700 - L80)