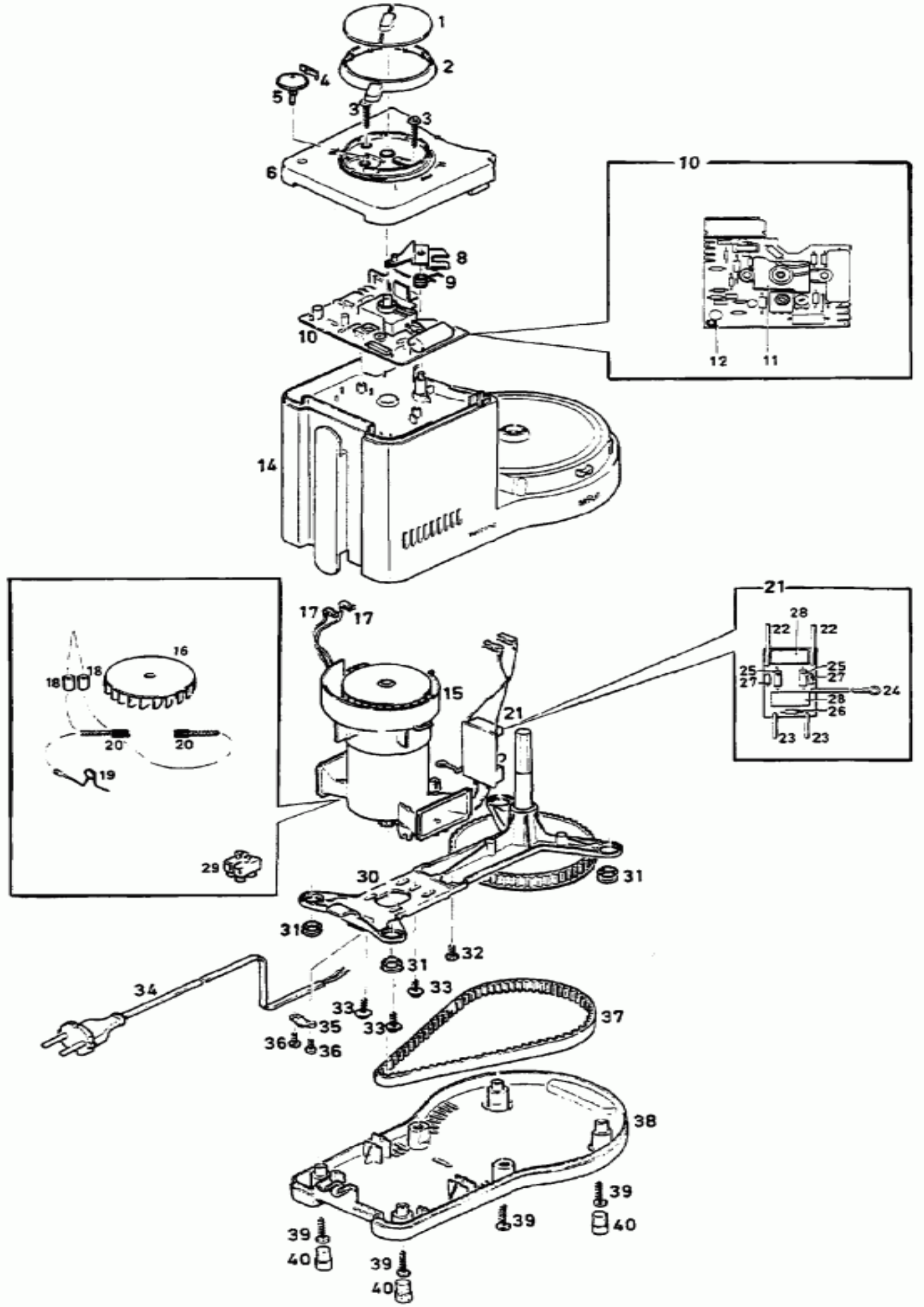
1
2
3
3
4
5
6
8
9
10
10
12
11
14
16
18
18
20
20
19
29
17
17
15
21
21
28
22
22
25
27
25
27
24
28
26
23
23
30
31
31
31
32
33
33
33
34
35
36
36
37
38
39
39
39
40
40
39
40

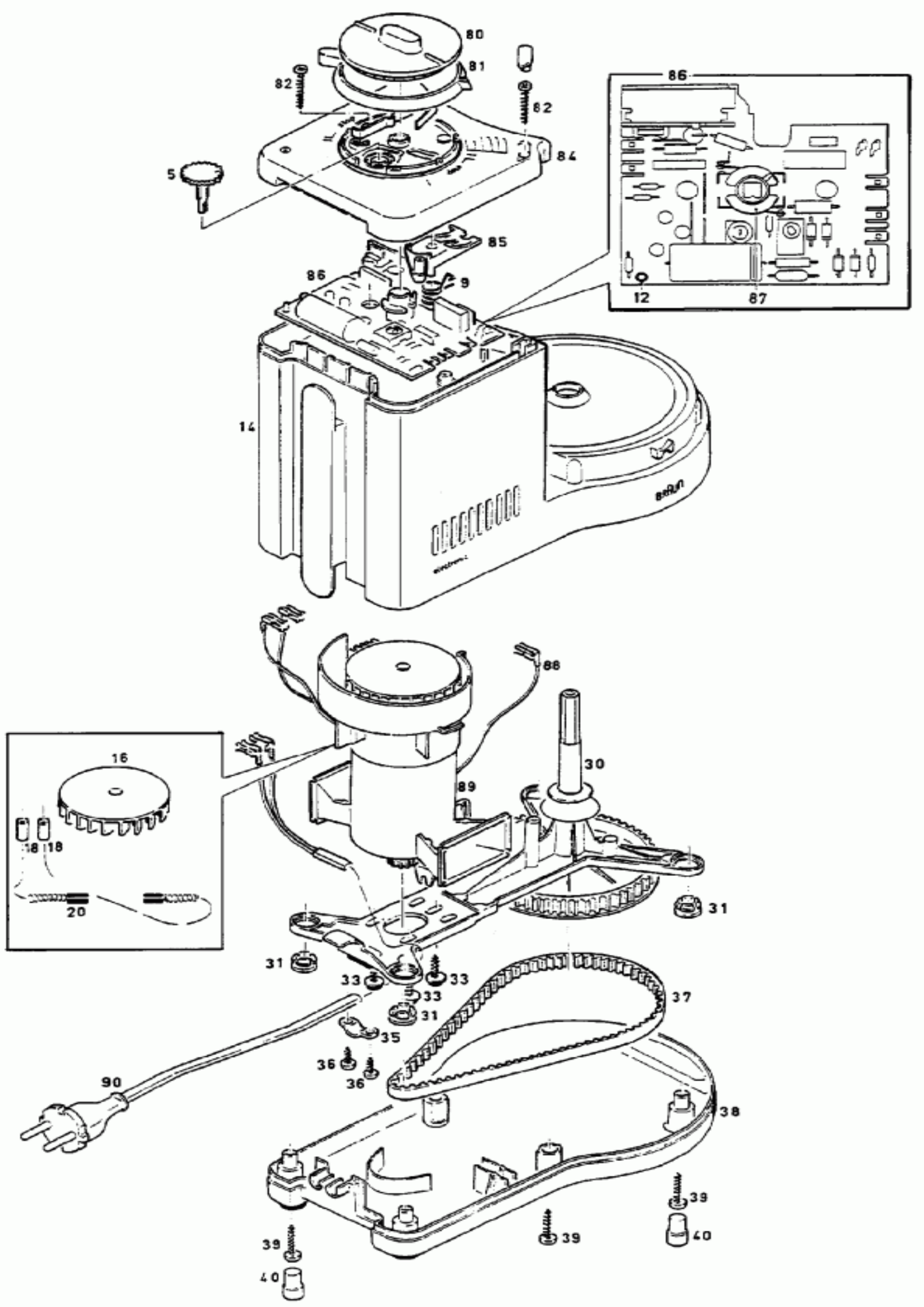
80
81
82
82
84
5
85
86
9
86
12
87
14
86
16
18
18
20
89
30
31
31
33
33
33
31
35
36
36
37
38
90
39
39
40
39
40

Teile für
1000 ml Topf
Parts for
1000 ml bowl

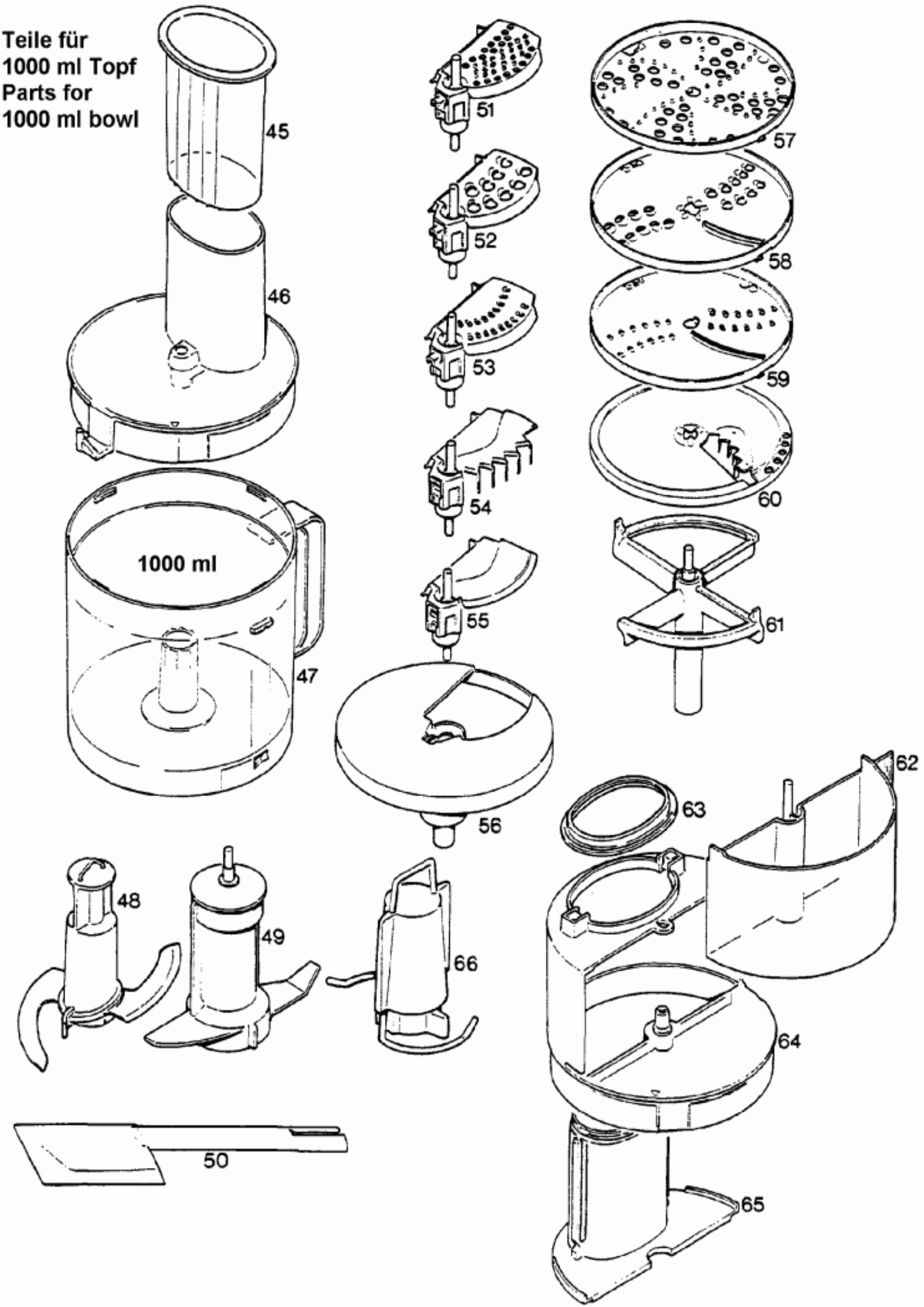

Teile für
500 ml Topf
Parts for
500 ml bowl

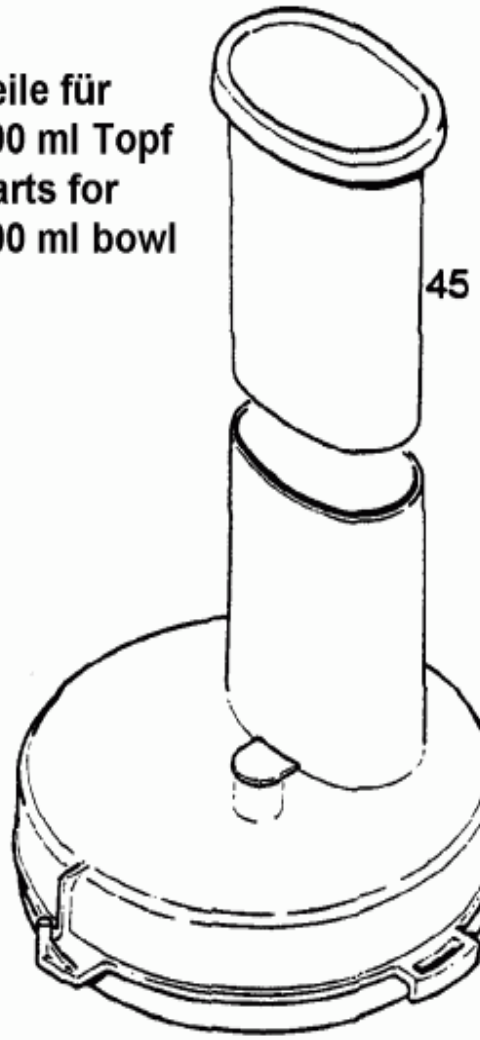

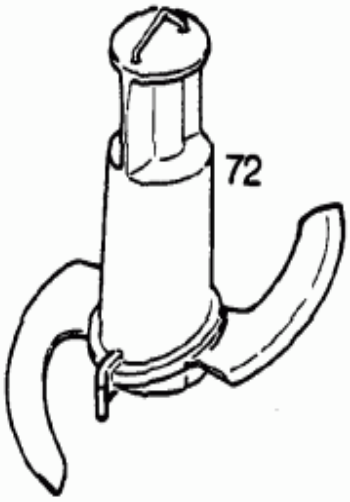

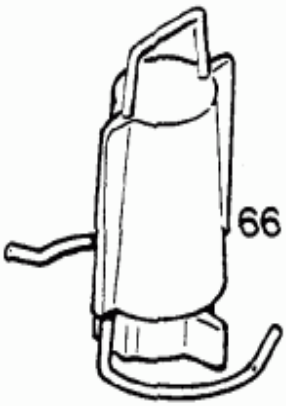

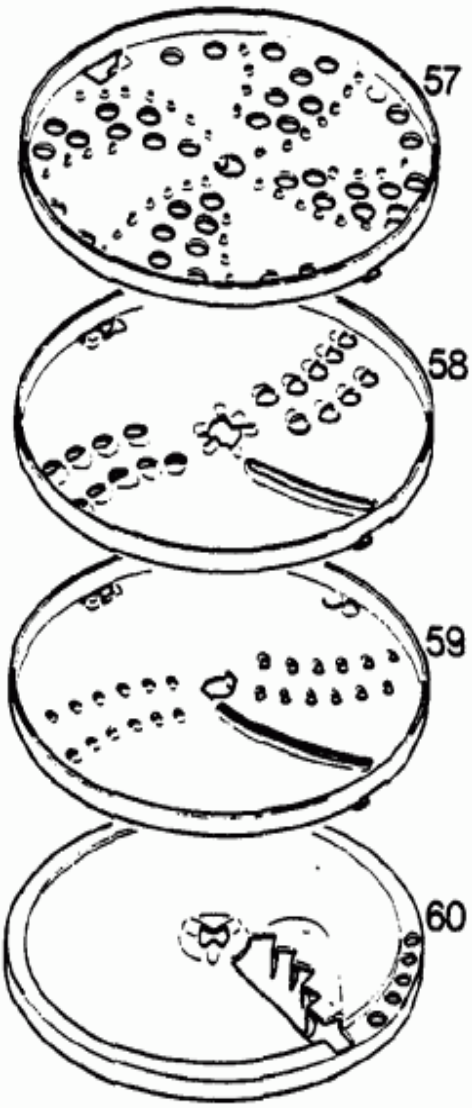

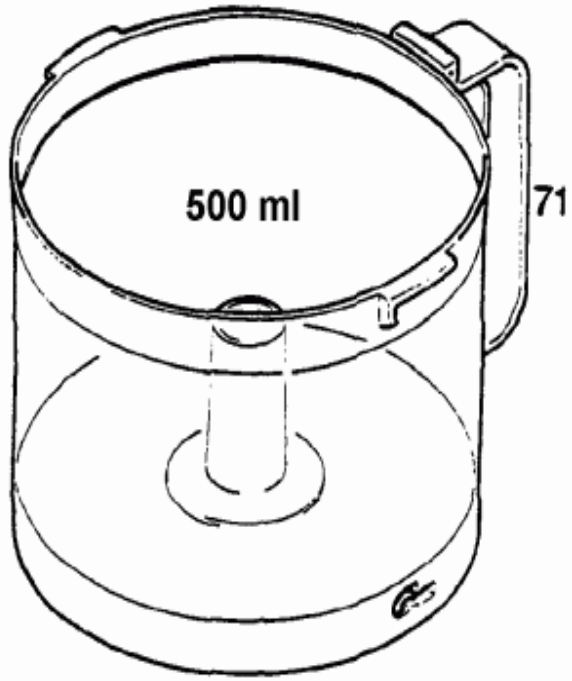

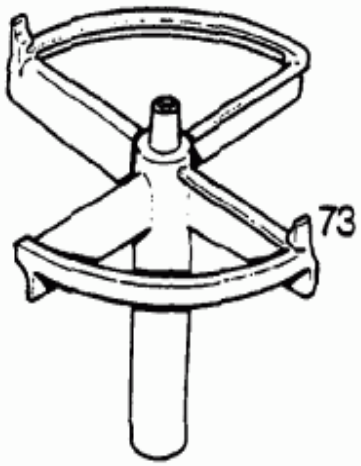

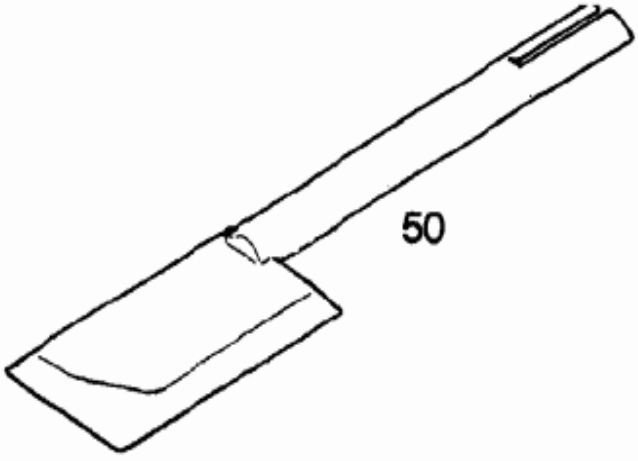

Attachments see
article group 4 243/4 258/4 261/4 289
Zubehör siehe
Artikelgruppe 4 243/4 258/4 261/4 289

UKZ 4

für/for
1000ml
Topf/Bowl

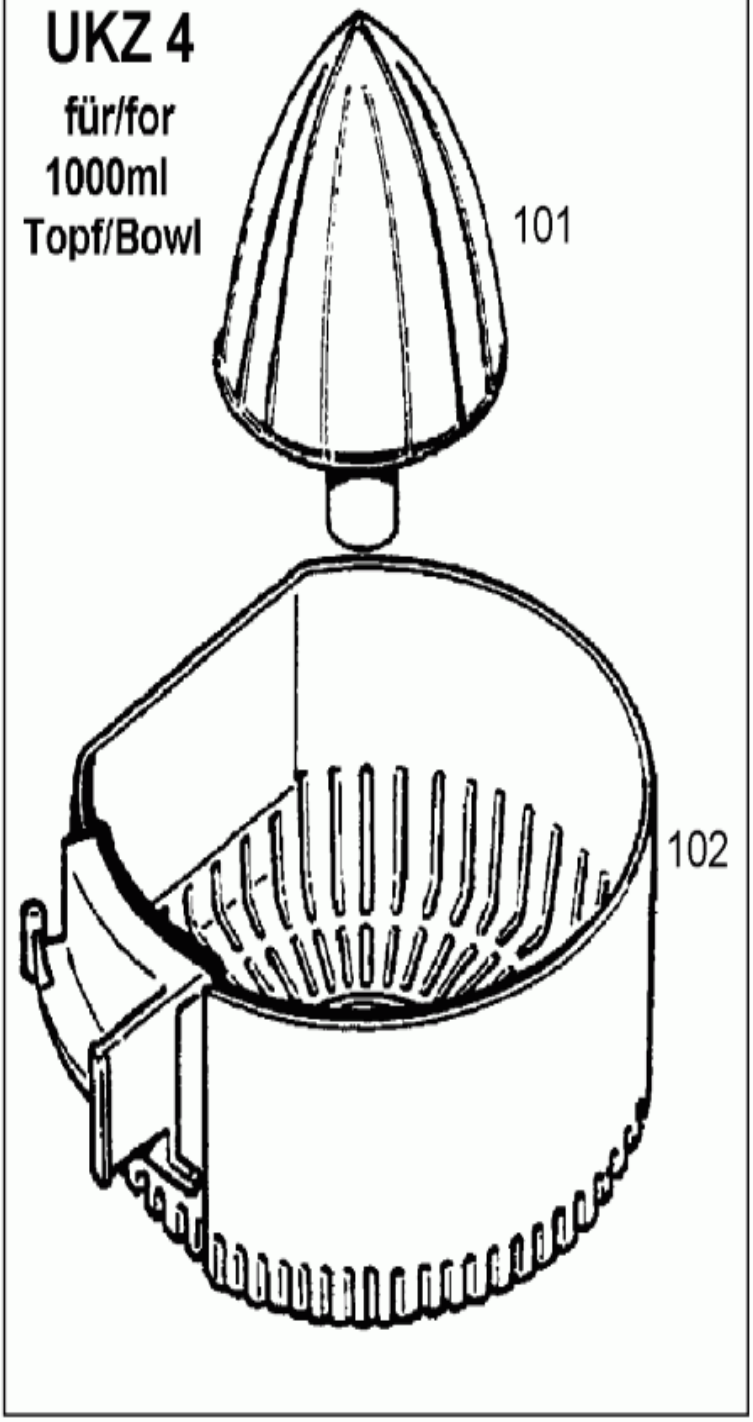

UKRT 4

für/for
1000ml
Topf/Bowl

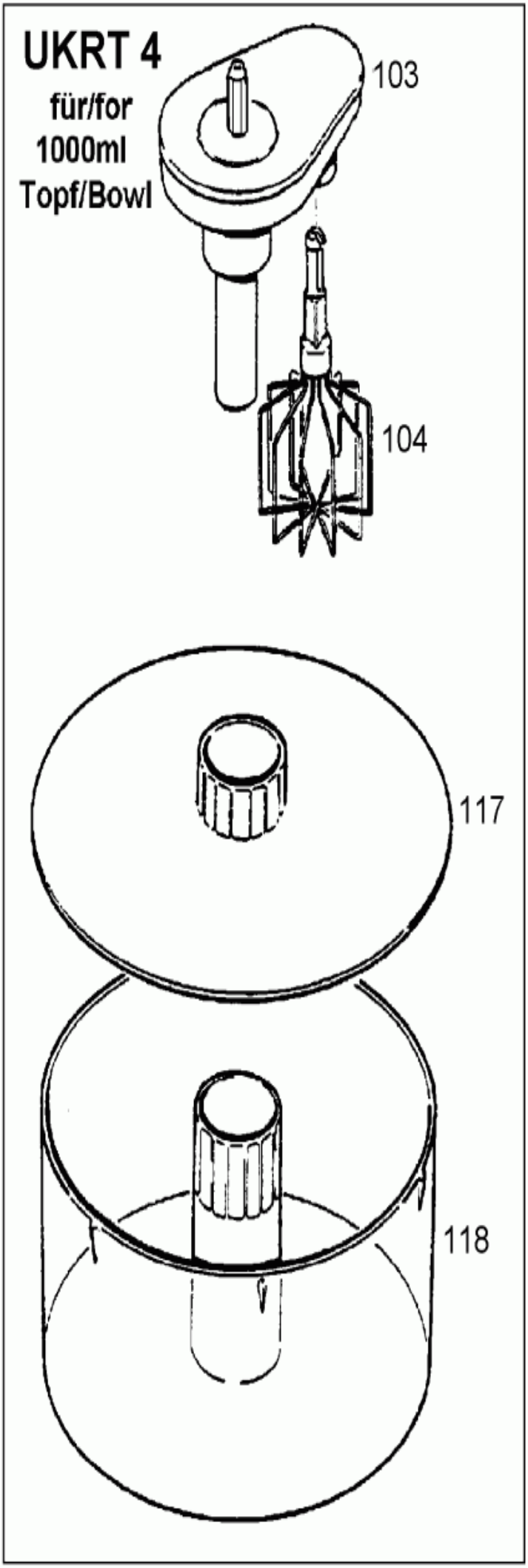

UKE 4

für/for 1000ml Topf/Bowl

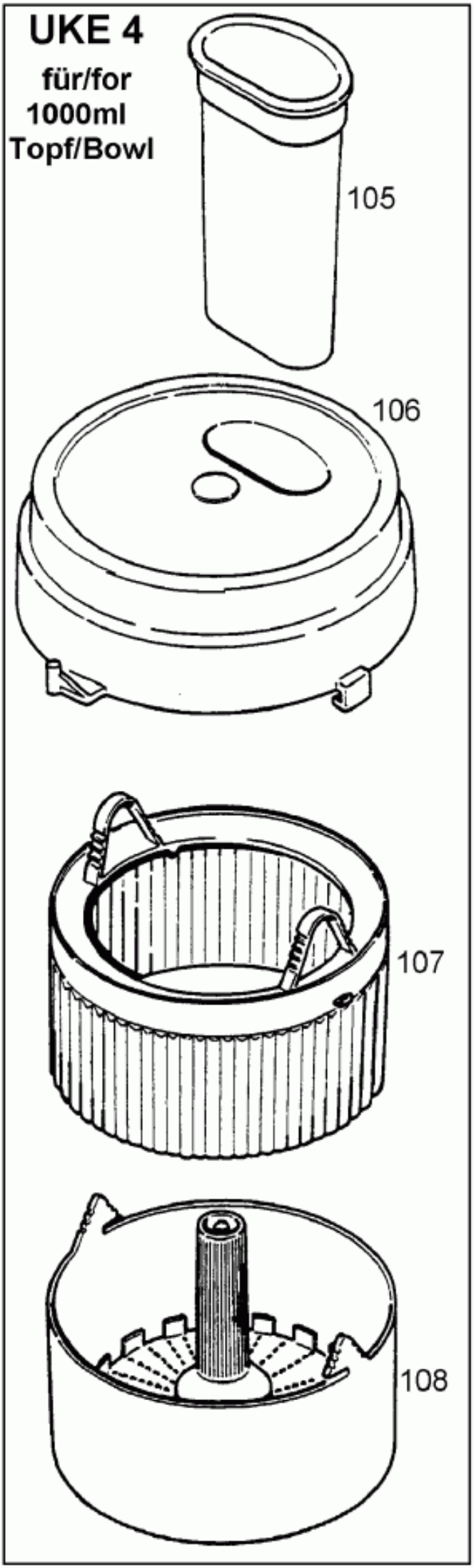

UKC 4

für/for 1000ml Topf/Bowl

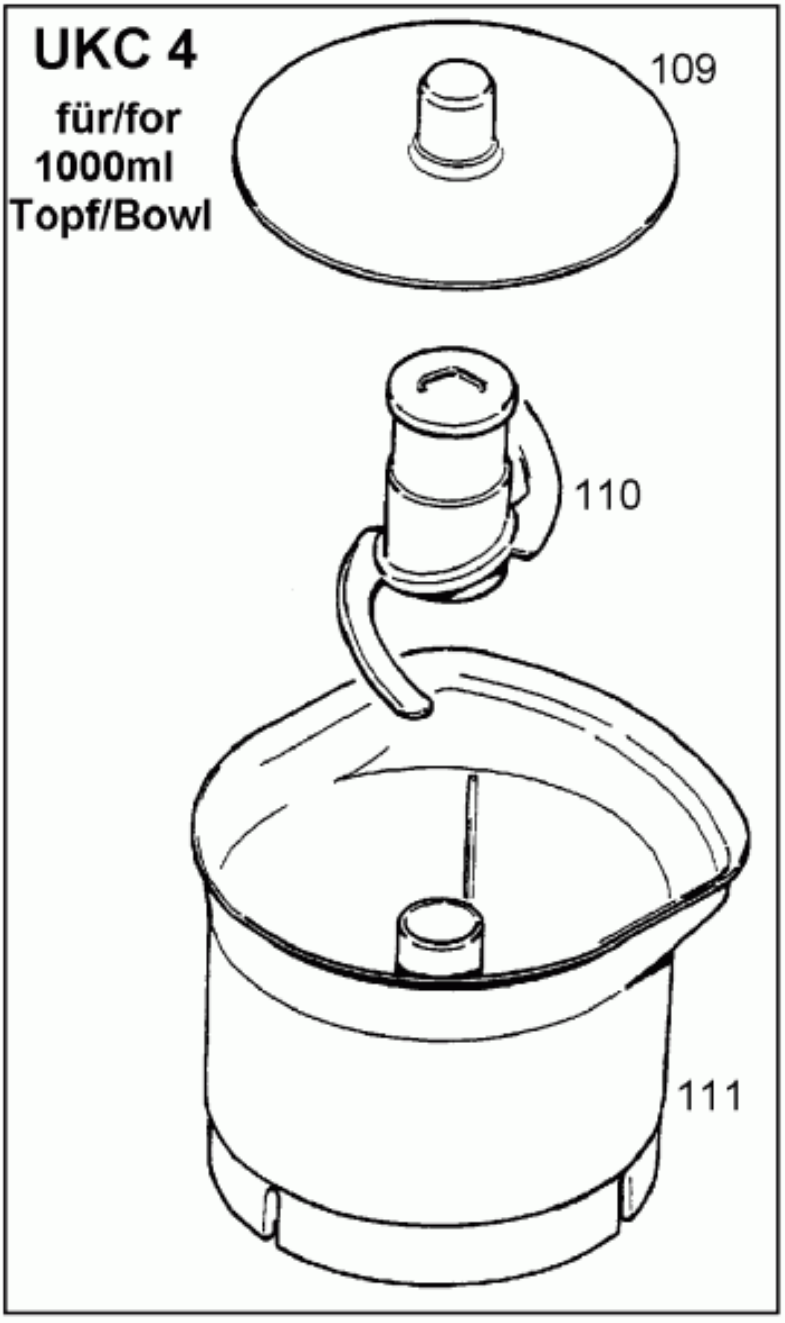

UKER 5
für/for
1000 ml
Topf/Bowl

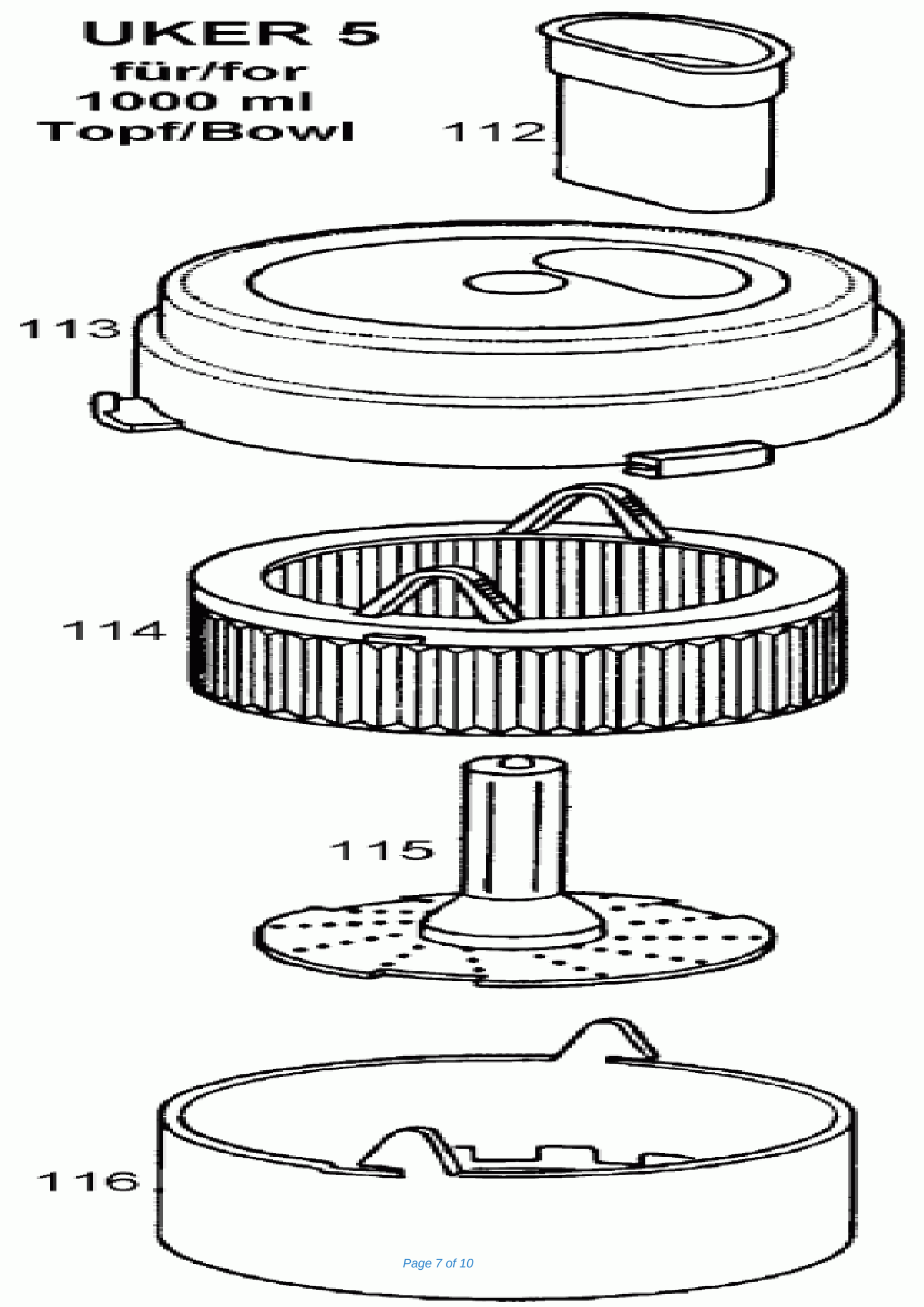

CH 4262 UK 40 Multipractic

Attachments:4243/4258/42614289

Position	Code	description
1	BR67001157	SWITCH KNOB
2	BR67001156	SPEED CONTROL RING
3	BR67000240	Screw 2,9x32
4	BR67002817	Flat spring
5	BR67001113	Spur gear
6	BR67001161	COVER
8	BR67001115	LEVER
9	BR67001046	Torsion spring
10	BR64262626	Control unit cpl.
11	BR67001155	SWITCH
12	BR67002414	Luminescent diode
14	BR67002057	HOUSING
15	BR64262629	MOTOR
16	BR67002819	Fan wheel
017A	BR67001944	Wiring 175 mm, blue
017B	BR67001945	Wiring 175 mm, red
19	BR64227885	CAPACITOR
20	BR67002755	CARBON BRUSH
21	BR64262631	Printed circuit board cpl.
022A	BR67001946	Wiring 165 mm, blue
022B	BR67001947	Wiring 165 mm, red
023A	BR64292076	Wiring 60 mm, blue
023B	BR64292077	Wiring 60 mm, red
24	BR67001952	Wiring 60 mm
25	BR64292020	R.F. Choke
26	BR60613348	Resistor 820 KOhm
28	BR60622248	Capacitor 0,22 mF
30	BR67002060	Supporting frame cpl.
31	BR67001120	RUBBER PAD
32	BR67000214	Screw 2,9x6,5
33	BR67000262	SCREW (42X13)
37	BR67002836	TOOTHED BELT
038A	BR64262621	BASE PLATE
038B	BR64262624	BASE PLATE
39	BR67000225	Screw 4,2x32
40	BR67001051	FOOT
45	BR67001122	PUSHER

46	BR67001165	Lid
47	BR67001126	BOWL
48	BR64292602	BLADE
49	BR67001171	Kneading attachment
50	AW20010012	HIGH-TEMPERATURE SPATULA KW
51	BR64262635	GRATING INSERT
52	BR64262637	COARSE SHREDDING INSERT
53	BR64262636	FINE SHREDDING INSERT
54	BR64262634	FRENCH FRIES INSERT
55	BR64262633	Slicing insert
56	BR67000001	Carrier disc cpl.
57	BR67001055	GRATING DISC
58	BR67001054	Coarse slicing/shred. disk
59	BR67001053	Fine slicing/shred. disk
60	BR67001056	FRENCH FRIES CUTTER
61	BR67002058	Disc carrier
62	BR67001128	Feed inlet, large
63	BR67002840	End ring
64	BR67001168	Lid
65	BR67001129	Feed inlet, small
66	BR67002825	DOUGH HOOK
80	BR64293615	SWITCH KNOB
81	BR67001173	SPEED CONTROL RING
82	BR67000252	SCREW (29X30)
83	BR67002842	Return spring
84	BR67001176	COVER
85	BR67001174	LEVER
86	BR64293613	Control unit cpl.
88	BR67002062	Wiring 210 mm, grey
89	BR67002061	MOTOR
90	BR64293930	Mains lead
300	BR67002839	Concealing plug
301	BR67000977	SPRING
302	BR64259190	Deflector ring
303	BR67002837	Felt ring 15
304	BR67002838	Felt ring 13,5
305	BR67002822	Upper motor protection
306	BR64262083	Lower motor protection

CH 4262 UK 40 Multipractic

Attachments:4243/4258/42614289

307	BR67001127	Notched segment
308	BR67001175	PROTECTION
754	BR64262194	RECIPE BOOK
755	BR67001121	RECIPE BOOK
1000	BR67051113	TORX SCREW
1001	BR64889026	Hand held meter (DEUMO)
1002	BR64889114	Tri-Wing hexagonal insert 60 mm