D 906 GII

C9S0DA001X

tav. 1

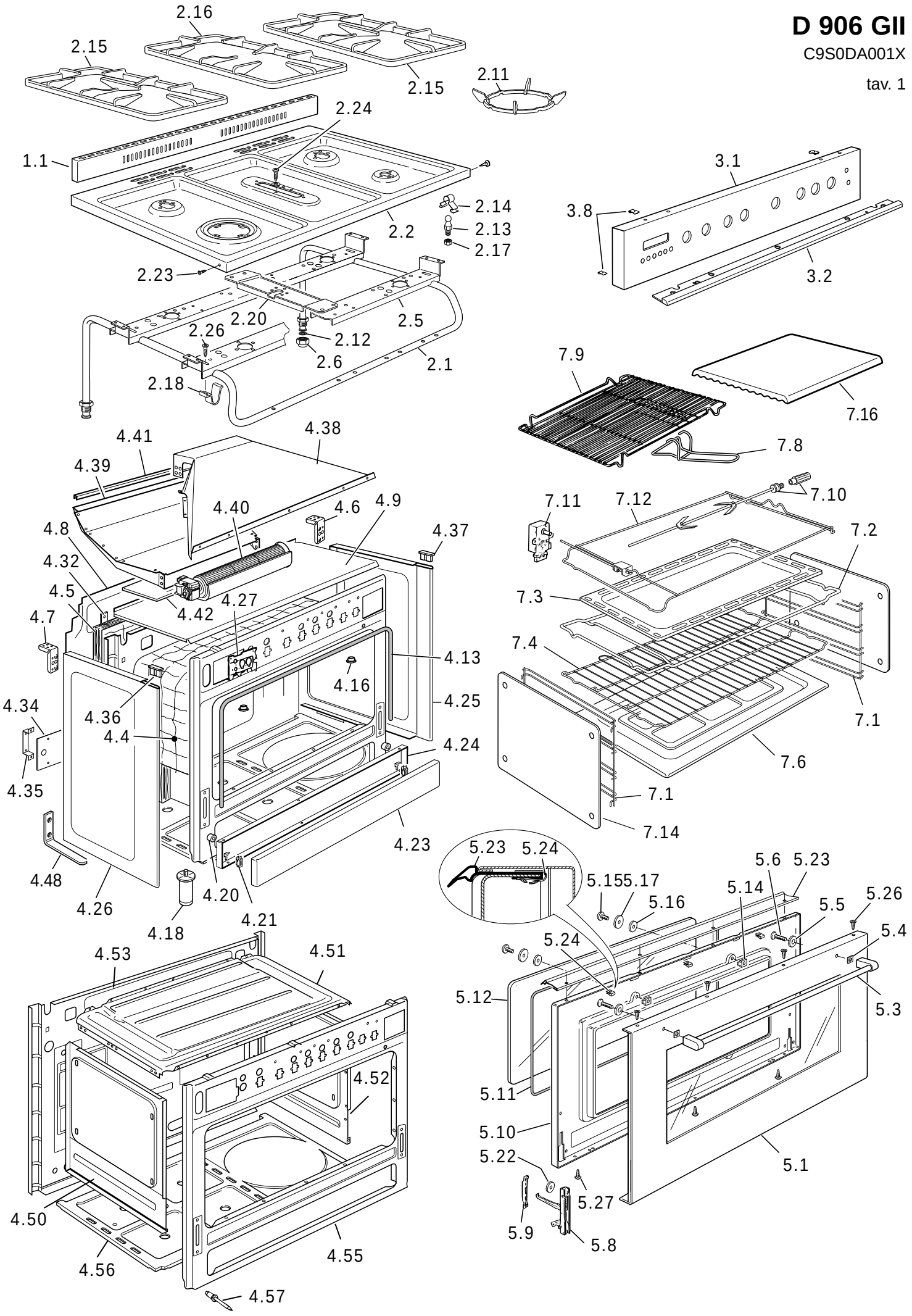

D 906 GII

C9S0DA001X

tav. 2

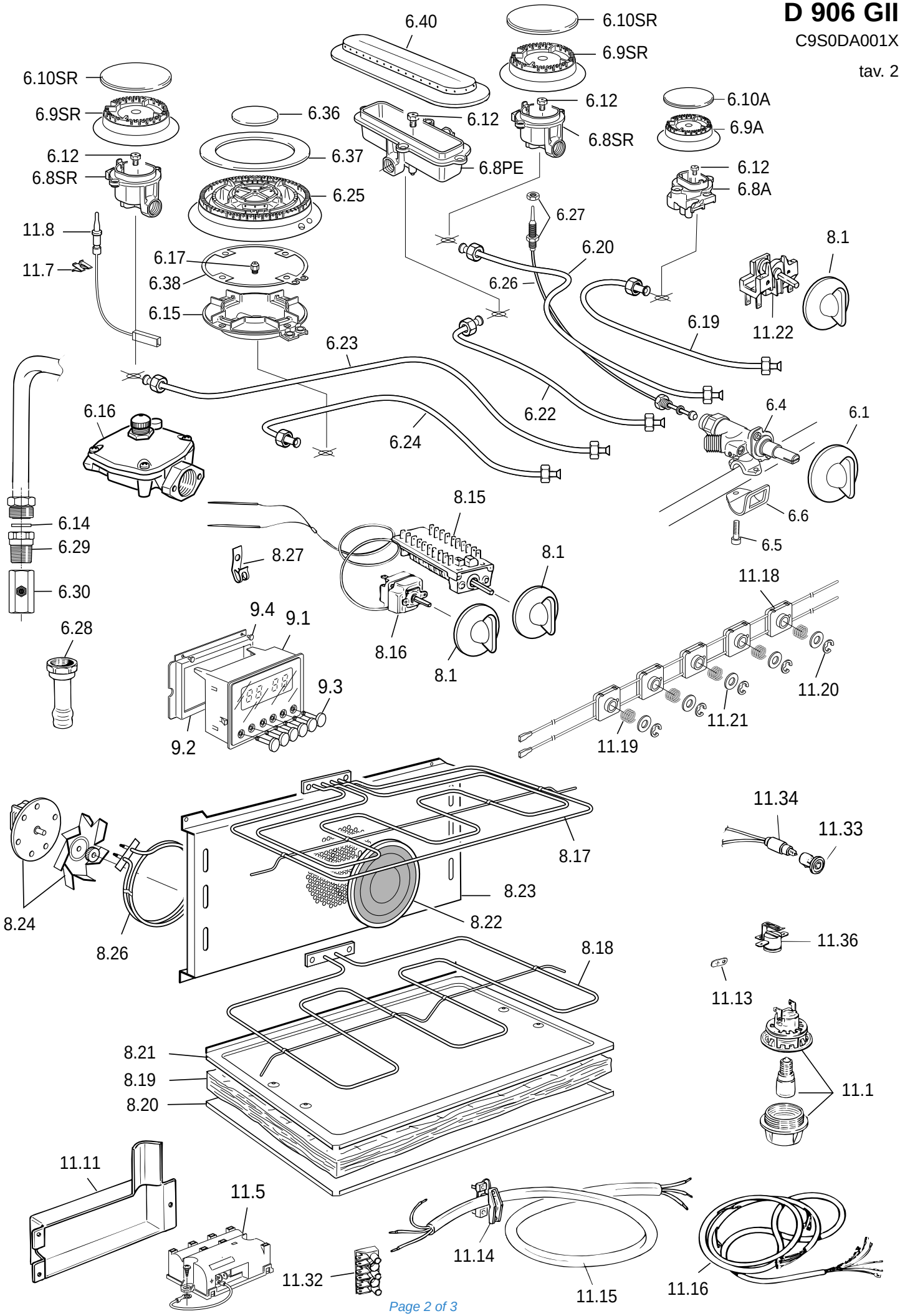

Position	Code	description
00D	6300021	Fan resistor kit
4.13	053101	SEAL
4.34	103505	Rotisserie motor protection
4.4	030074.1	Oven insulation
5.11	053058	GASKET
6.14	053024.1	Sealing washer
7.8	037208	Grill-pan grid handle
8.21	4219605Z	Bottom element support
1134	073040.2	Control lamp L=750